LIBRARY – AIR RESOURCES BOARD

FINAL REPORT
SET #2581-01-0681

Inventory of Emissions From Marine Operations Within The California Coastal Waters

By

W. C. Kelly,
L. R. Reckner and G. D. Maines

Scott Environmental Technology, Inc.
2600 Cajon Boulevard
San Bernardino, California 92411

Prepared For

California Air Resources Board
Sacramento, California

Contract No.: ARB A6-208-30
ARB Project Officer: Jack Paskind

June 26, 1981

TABLE OF CONTENTS

	Page Number
DISCLAIMER	i
ACKNOWLEDGEMENTS	ii
ABSTRACT	iii
LIST OF TABLES	iv
LIST OF FIGURES	v
1.0 INTRODUCTION	1-1
1.1 PURPOSE AND SCOPE	1-1
1.2 CONCLUSIONS	1-2
1.3 RECOMMENDATIONS	1-3
2.0 BACKGROUND INFORMATION	2-1
3.0 INVENTORY	3-1
3.1 SCOPE OF PROGRAM	3-1
3.2 APPROACH	3-1
3.3 PROGRAM PLAN	3-4
3.3.1 REVIEW OF MARINE OPERATIONS	3-5
3.3.2 DATA GENERATION	3-6
3.3.3 TESTING	3-24
3.3.4 ENGINE POWER FACTOR	3-31
3.3.5 EMISSION FACTORS	3-36
3.3.6 DATA PROCESSING	3-44
3.4 INVENTORY RESULTS	3-47
3.4.1 EMISSION SUMMARIES	3-48
3.4.2 HYDROCARBON EMISSIONS BY REACTIVITY CLASS	3-48
3.4.3 SPATIAL DISTRIBUTION	3-75
3.4.4 TEMPERAL DISTRIBUTION	3-86
3.4.5 IN-TRANSIT HYDROCARBON LOSSES	3-86
3.4.6 TEMPERAL VARIATIONS	3-93
3.4.7 PETROLEUM AND PETROLEUM PRODUCT TRANSFERS	3-94
3.5 DISCUSSION OF RESULTS	3-132
4.0 TRENDS IN MARINE OPERATIONS	4-1
5.0 MARINE EMISSIONS CONTROL TECHNOLOGY	5-1

TABLE OF CONTENTS continued

Page Number

6.0 EMISSIONS FROM SMALL CRAFT WITHIN SOUTHERN CALIFORNIA COASTAL WATERS---------- 6-1

6.1 GASOLINE CONSUMPTION---------- 6-4

6.1.1 REGISTERED VESSELS---------- 6-4

6.1.2 DOCUMENTED VESSELS---------- 6-5

6.1.3 EMISSION FACTORS---------- 6-6

6.2 DIESEL USAGE BY SMALL CRAFT---------- 6-6

7.0 REFERENCES---------- 7-1

8.0 BIBLIOGRAPHY---------- 8-1

APPENDIX A - M.A.N. TWO AND FOUR STROKE DIESEL EXHAUST---------- A-1

APPENDIX B - DISTRIBUTION OF EMISSIONS BY PORT/LOCATION AND MONTH------ B-1

APPENDIX C - 1976 JULIAN CALENDAR---------- C-1

DISCLAIMER

The statements and conclusions in this report are those of the contractor and not necessarily those of the California Air Resources Board. The mention of commercial products, their source or their use in connection with material reported herein is not to be construed as either an actual or implied endorsement of such products.

ACKNOWLEDGEMENTS

Scott Environmental Technology, Inc. wishes to express its sincere appreciation to all the individuals and organizations who spent time and resources contributing information to the program. Specific thanks go to:

- The Western Oil and Gas Association and member companies for supplying detailed petroleum transfer information.
- The Atlantic Richfield Company for allowing Scott to conduct emissions tests under actual tanker operations.
- The Harbors of Long Beach, Los Angeles and San Francisco for providing detailed vessel movement data.
- Mr. Thomas Hecht, Chevron U.S.A. for technical assistance, and
- The California Air Resources Board Project Officer, Mr. Jack Paskind and staff for technical assistance and patience during the program.

ABSTRACT

The goal of the marine emissions evaluation program was to determine the nature and extent of marine and marine activity related air pollution emissions in the coastal waters and ports of California during the calendar year 1976. Originally, the program was designed to determine these emissions in the waters bounded by the South Coast Air Basin, however, the study was subsequently expanded to cover the entire coast of California. Major sources of emissions were determined to result from the operation of marine engines and auxiliary power plants and from the transport, handling, storage and transfer of petroleum and petroleum products and ballasting and lightering associated with tanker vessel operation. In order to obtain precise data, Scott attempted to trace and record the activity of each and every commercial vessel in the waters of California and to calculate the emissions relating to each and every activity of these vessels. From marine related activities in 1976, Scott determined that within California Coastal Waters:

41.4 tons per day of NO_x were emitted
8.3 tons per day of CO were emitted
79.2 tons per day of SO_2 were emitted
21.5 tons per day of hydrocarbons were emitted
7.6 tons per day of particulates were emitted

It was further determined that of the total hydrocarbons emitted (21.5 tons per day), 14.8 tons per day resulted from vapor emitted from tanker vessels during loading of petroleum and petroleum products, and ballasting following tanker unloading and 3.6 tons per day result from vapors emitted due to in-transit (breathing) losses.

LIST OF TABLES

		Page Number
3.1	California Ports	3-13
3.2	Towboat Companies	3-17
3.3	South Coast Air Basin	3-22
3.4	Summary of Test Procedures	3-24
3.5	Marine Power Plant Test Summary	3-27
3.6	ARCO Sag River Profile Test Run Log, Long Beach-San Francisco	3-28
3.7	Marine Vessel Power Requirements	3-32
3.8	Fuel Usage for Cargo Pumping	3-35
3.9	Petroleum Transfer Emissions Factors	3-38
3.10	ARB Reactivity Classification of Organic Compounds	3-40
3.11	Petroleum Transfer Emission Factors	3-42
3.12	Combustion Emissions Factors, Lbs/1000 Gallons Fuel Consumed	3-45
3.13	Summary of Emission Inventory By Source	3-49
3.14	Port Codes	3-56
3.15	Activity/Source/Location Codes	3-57
3.16	Emission Inventory Summary By Port	3-58
3.17	Emission Inventory By Source/Activity	3-69
3.18	Emission Inventory By Area	3-77
3.19	Summary of Emissions By County	3-84
3.20	1976 Emissions Summary By Area and Month	3-87
3.21	Petroleum Transfer Emissions	3-95
3.22	Summary of Engine Emissions	3-101
3.23	Summary of Petroleum Cargo Transferred	3-131
3.24	Summary of 1976 Marine Emission Inventory Results	3-132

LIST OF FIGURES

Page Number

3.1 - Area Under Study---------- 3-2
3.2 - Fuel Consumption for Tugs-Ship Assistance Tugs (20%)---------- 3-18
3.3 - Fuel Consumption for Tugs-Moderate Activity (Tow Barge & Tend)---- 3-19
3.4 - Fuel Consumption of Tugs-Under Tow (80% of Full Power)---------- 3-20
3.5 - Marine Testing Instrument System---------- 3-26
5.1 - Flame Arrestor Specification---------- 5-5
6.1 - Subdivision of Boat Population---------- 6-2

1.0 INTRODUCTION

1.1 PURPOSE AND SCOPE

The purpose of the study conducted was to determine the nature and extent of pollutant emissions caused by, or associated with, maritime activities in California coastal waters and ports for the calendar year 1976.

The scope of the study included an assessment of pollutant emissions from marine engines, transfer and handling of volatile organics, evaporative losses during transport and an assessment of the mass of organic vapors released into the atmosphere during petroleum loading, ballasting and lightering operations.

The vast bulk of engine emissions was anticipated to occur from steam driven and diesel powered large vessels, including tankers, general cargo vessels, passenger ships and other special purpose vessels encountered in normal commerce. These vessels employ propulsion plants ranging from about 7,000-45,000 horsepower and consume fuel at a rate ranging from about 10-190 tons of fuel oil per day.

Lesser vessels, including tugs, fishing boats and other commercial craft employing small marine diesel and gasoline engines are also considered in this report. Pleasure craft were not included in the overall inventory.

Pollutants resulting from fossil fuel combustion from all ships include oxides of nitrogen, hydrocarbons, carbon monoxide, sulfur oxides and particulates.

A significant portion of maritime activities is associated with petroleum product movements and transfers. The handling of petroleum products gives rise to organic vapor emissions and the impact of these emissions is treated under the separate categories of loading, ballasting and lightering.

The project was designed to determine and account for each and every vessel movement and operation in the waters off California during 1976. Scott Environmental Technology, Inc. contacted virtually every port, marine terminal and any other viable source of marine information so that every movement and operation of every commercial vessel in California waters could be adequately and precisely assessed for emissions evaluation.

The ports of Long Beach, Los Angeles, San Francisco and San Diego are capable of identifying all commercial vessels entering their waters. Moreover, intra-port movements and activities are carefully logged and identified. Utility companies and petroleum companies maintain and operate land based and off-shore terminals for the transfer and handling of petroleum products. Scott obtained detailed information from these sources regarding their 1976 activities, movements, transfers and related activities.

All of these data were compiled, edited and entered into computer files to maintain a permanent, interactive inventory of operations from which total emissions and/or operational emissions could be calculated and extracted.

Emission data derived during the program is incorporated into an emissions inventory summary, presenting the data temporally and spatially according to each pollutant and its source.

1.2 CONCLUSIONS

During calendar year 1976 there were approximately 81,000 commercial vessel trips in and around California ports. During the year, commercial tankers loaded and unloaded respectively, 234 and 510 million barrels of petroleum and petroleum products. The majority of transfers were made up of the following products:

Product	Loaded (Bbls) x 10^6	Unloaded (Bbls) x 10^6
Crude Oil	92.3	379.3
Fuel Oil	61.2	63.5
Gasoline	25.2	24.0
Diesel	18.2	26.2

Emissions associated with marine operations during 1976 contributed

- 7,861 tons of Hydrocarbons
- 3,034 tons of Carbon Monoxide
- 15,170 tons of Oxides of Nitrogen
- 28,985 tons of Oxides of Sulfur
- 2,770 tons of Particulate

to the air space above California Coastal Waters.

Of the total hydrocarbons generated, over half resulted from transfers of petroleum and petroleum products. Approximately 80% of all hydrocarbons emitted were of Class II reactivity (moderately reactive).

The highest density of hydrocarbon emissions were from marine operations in the waters off the coasts of Contra Costa and Los Angeles counties. CO, NO_x, SO_x and Particulate emissions were the highest in density off the county coasts of Los Angeles, Orange, San Diego and San Francisco.

The results of the inventory conducted are considered to accurately represent emissions generated by marine operations during 1976.

1.3 RECOMMENDATIONS

The emission inventory conducted was for calendar year 1976. Although it is believed no major changes in marine operations have occurred since 1976, in order to enhance the value of the results, it is recommended that the inventory be updated to a current year. The information required to accomplish an update would be vessel movement and petroleum transfer data. Additional data verification and testing efforts should be directed towards engine power and emission factors. Finally, a survey should be conducted to determine the sulfur content of fuel currently being burned.

2.0 BACKGROUND INFORMATION

The quality of the air is affected by the quantity of pollutants emitted into it. This initial premise has led to regulatory action aimed at minimizing emissions from major stationary sources (such as electric utilities) and mobile sources (such as automobiles).

Although emission reduction efforts have been implemented, and have achieved varying degrees of success, the quality of the air in California is nominally the same as it was 10 years ago. This fact is due, in part, to an increase in the number of stationary and mobile sources, as well as an increase in the productivity of those previously existing sources. Regulations have been enacted over the past ten years in an attempt to significantly decrease the pollutants emitted from California's land based sources and mobile sources.

In coastal areas, the emission attributable to the operation of marine vessels were suspected to have a significant impact on the air quality of these areas. Depending on other local sources, emissions from off shore activities under certain conditions result in violations of State and federal ambient air quality standards in California's coastal air basins. The effect of these emissions is obviously dependent upon the transport and diffusion of the pollutants. Periods in which off shore emissions are carried away from populated areas and diffused have minimal impact on the on shore air quality.

The emissions from marine vessel operations are of two main types:

A - Emissions associated with fuel combustion, and

B - Emissions associated with fuel and petroleum cargo transfers.

The emissions associated with fuel combustion are primarily oxides of sulfur which result from the combustion of sulfur in the fuel; oxides of nitrogen which result from the combustion of nitrogen in the fuel, and the combination of nitrogen and oxygen in the combustion air due to the high temperatures of fuel combustion with lesser amounts of particulates caused by incomplete fuel combustion, and the ash and asphaltene content of the fuel, carbon monoxide and hydrocarbons.

The emissions associated with fuel and petroleum cargo transfers are hydrocarbons, primarily emitted as a result of vaporization of liquid cargo during fuel transfer operations.

Ship operations which result in hydrocarbon emissions are briefly summarized below.

- Loading - Hydrocarbons are emitted to the atmosphere when the vapors occupying "empty" tanks are displaced by the incoming fuel. In addition to the vapors displaced, hydrocarbon vapors are generated due to the turbulence of the incoming fuel. Factors which affect the hydrocarbon content of the vapor space include the true vapor pressure of the previous cargo ballasting and tank cleanliness.
- Ballasting - An emission similar to that encountered in loading operations occurs after a petroleum cargo is unloaded from a ship. In order to maintain trim and stability and to allow safe operation of the ship, sea water is pumped into the cargo tanks prior to leaving port, thereby displacing the hydrocarbon vapors remaining in the tanks to the atmosphere.
- Purging - In this operation, the gases from a ship's inerting system (typically sea water scrubbed boiler flue gas) are forced into the cargo tanks to reduce oxygen and hydrocarbon vapors in these compartments.

  Once a tanker is underway, there are two conditions requiring purging of the compartment(s): 1) to restore a satisfactory inert atmosphere in the compartment(s), or 2) to reduce the hydrocarbon concentration for maintenance in the cargo compartment(s). For example, when aeration of the cargo compartment is required prior to entry by maintenance personnel for safety reasons, purging would be conducted both before aeration and after the completion of the maintenance.
- Ullaging - This practice refers to the removal of ullage hatch covers during loading or unloading to determine how much liquid cargo is in the tank prior to and at the completion of the petroleum transfer. The normal procedure is to have an independent marine service take the measurements with a measuring tape.

- Gas Freeing - The process of cleaning the tanks, often accompanied by purging operations, is termed gas freeing. Gas freeing is typically conducted prior to the ship entering drydock for repairs, or before hot work is done below deck. These operations are often conducted at sea, thereby minimizing the effect on air quality in populated areas.
- Breathing - Another source of hydrocarbon emissions, primarily occuring at sea, relate to the breathing losses attributable to fluctuations in ambient temperature, pressure, wind, hydrocarbon vapor buildup, movement of the ship, and quantity of leakage from the cargo spaces to the atmosphere.

The state of California has approximately 840 miles of coastline, and many natural harbors and bays. Commercial ship traffic in waters near the California coast has continued to grow steadily. In 1976 there were approximately 81,000 commercial vessel trips in and between major California ports. The total crude oil and gasoline transfers amounted to approximately 66 million tons in 1976. The large majority of this activity occurred in the southern coastal half of the state (including the ports of Los Angeles, Long Beach and San Diego) and the port of San Francisco.

There are a total of 66 marine terminals in California which receive and/or export crude oil and nearly every type of petroleum product. Refineries are located in areas including Los Angeles, Long Beach and San Francisco. In these areas, crude is received, refined and exported typically as gasoline, diesel and fuel oil. In Ventura, Santa Barbara and San Luis Obispo counties, the marine terminals are primarily utilized to load crude oil for shipment to refineries. Additionally, fuel oil is unloaded at power plant sites located along the coast.

The vessel traffic along the California shore include mainly internal combustion engines, or boiler-powered propulsion systems. Excluding tugs and small craft, which are mainly diesel powered, about 94% of the United States flagships visiting California ports in 1976 were steam (boiler) powered, and 90% of the foreign ships were motor (internal combustion engine) driven. This difference is mainly due to the fact that until recently, large American-made diesel engines were unavailable.

The three major factors affecting the nature and quantity of emissions generated during fuel combustion are:

1. Type and size of the vessel's power plant.
2. Type and composition of the fuel burned.
3. Operating mode and load on the power plant.

Details of specific power plant configurations are presented in Section 3.3.4.

3.0 INVENTORY

The inventory compiled is the result of an exhaustive gathering of data regarding air emission producing marine operations. The two major operations documented were the transferring of petroleum products and vessel movements. Every attempt was made to document every conceivable transfer and movement within the study time and space.

3.1 SCOPE OF PROGRAM

The scope of the program conducted was to determine the magnitude of emissions generated from marine operations during calendar year 1976 within California Coastal Waters. Criteria pollutant (HC, CO, NO_x, SO_2, Particulates) emissions generated were to be classified by time and space with hydrocarbons broken down according to the Air Resources Board's Three Class Reactivity Scheme. California Coastal Waters (CCW) are defined as the area between the California coastline, including contiguous harbors and bays, and a line starting at the California-Oregon border at the Pacific Ocean connecting the following points: 42.0^{o}N - 125.5^{o}W, 40.0^{o}N - 125.5^{o}W, 38.0^{o}N - 124.5^{o}W, 33.0^{o}N - 119.5^{o}W, 32.5^{o}N - 118.5^{o}W and ending at the California-Mexican border at the Pacific Ocean. The area included in the study is approximately 50 miles wide and is shown pictorially in Figure 3.1. Only emissions on the water side of the water-land line were included in the study. Land operations are considered point sources and were previously documented by the Air Resources Board.

3.2 APPROACH

The objective of the program mandated an approach that subdivided marine operations into sufficient detail so that the resultant emission inventory possessed detailed spatial and temperal definition. The approach used resulted in daily temperal and 10 by 10 kilometer square spatial definition. Meeting the temperal and spatial objectives of the program precluded applying broad scenarios of marine operations conducted.

The approach used to generate the data base for the transfer of petroleum cargos and related operations, such as lightering and ballasting, was to solicit petroleum cargo transfer information from operators of marine terminals within the study. In conjunction with the support of the Western Oil and Gas Association (WOGA), Scott successfully solicited cargo transfer data from every marine terminal operator. Terminals included were both off shore and dockside and in the majority of cases (79% of cargo transferred) included the type product, date and time of transfer and receiving or unloading vessel. Since many petroleum movements by ship which originate in California terminal in California,

FIGURE 3.1
AREA UNDER STUDY

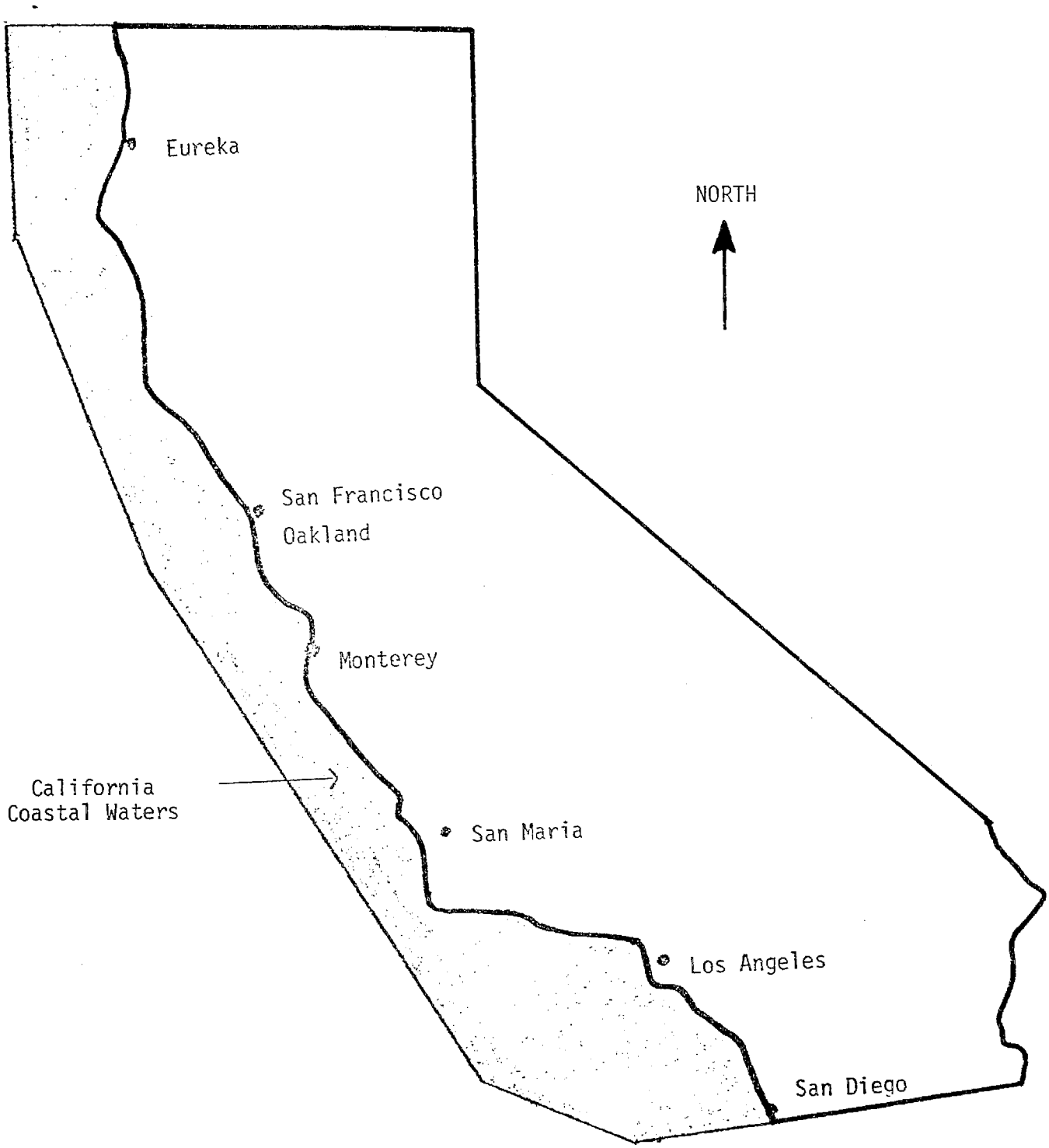

the detailed transfer data provide an excellent check of the thoroughness of the data gathering activity.

The cargo transfer data were programmed along with emission factors and details of related operations, i.e., lightering and ballasting, to provide a detailed inventory of emissions resulting from the transfer of petroleum cargos within the study time and area. A similar approach was taken in documenting emissions from marine combustion sources. Combustion emissions were basically generated during two modes - the operations of the vessel and off-loading of petroleum cargos (onloading of cargo is accomplished by shore pumps which are not considered marine emissions). Emissions from combustion sources generated during cargo pumping were based on the quantity of cargo off-loaded, calculated quantity of fuel required to drive pumps to unload the cargo, and emission factors for engines driving the cargo pumps.

The approach used to document emissions generated during the operation of vessel power plants was similar to that used for petroleum cargo transfer emissions. That is, an attempt was made to gather sufficiently detailed data so that a broad and possibly inaccurate scenario did not have to be employed. This attempt was successful and Scott feels over 98% of vessel movements within the study area and time were documented. Detailed vessel movement data were requested from harbors within California. Information solicited included:

- Vessel name
- Arrival date and time
- Previous port
- Type of vessel - cargo - tanker - barge, etc.
- Propulsion system and size - steam - diesel
- Departure date and time
- Destination

As with petroleum cargo transfer data, a high degree of success was encountered in soliciting vessel movement data. When these vessel movement data were combined with similar data from movements at petroleum terminals, an extremely detailed and accurate record of all vessel movements was generated. As with petroleum cargo movements, intra-state vessel movements provided an excellent check as to the thoroughness of the vessel movement data gathering task. Power and emission factors were developed and applied to each vessel movement or activity resulting in a detailed summary of emissions from vessel power plants.

Miscellaneous marine emission sources were, to a lesser degree, also documented in detail. These included Coast Guard activities, tug movements and small commercial craft which was mainly composed of ferries. Pleasure craft were not included in the study due to the fact they had previously been documented by the Air Resources Board.

Emission factors were thoroughly reviewed. Where possible, recently generated data along with test data collected during the program were used to verify or modify published factors.

The emission inventory generated was detailed in time by each day during calendar year 1976 and space by 10 Km squares except in the Los Angeles-Long Beach Harbor which was divided by 1 Km squares.

The approach selected for the study resulted in a detailed emission inventory which, within the limits of emission factors used, is felt to be representative of emissions generated within California Coastal Waters during calendar year 1976.

3.3 PROGRAM PLAN

The program plan developed to meet program objectives involved first reviewing all marine operations within the study area and summarizing sources requiring inventorying and approximate effort required by each source. Generally, all sources could be classified as relating to petroleum transfer operations or vessel operation. Once all known sources were classified, the data gathering portion of the program commenced. This was by far the largest program task. Sizeable difficulty was encountered in obtaining sufficient information to be reliable and the continual identification of new ports along the coast requiring inventory. A successful attempt was made to obtain sufficiently detailed vessel movement and cargo transfer data which would produce an inventory with a high confidence factor. It is felt that this objective was met 95% of the time. In addition, the detail obtained facilitated a high degree of quality assurance since a large majority of vessels make regular movements within the study area.

An extremely important task of the program, and the most difficult, was that of compiling emission factors for the various activities occurring in the inventory. Emission factors were divided into combustion and petroleum transfer categories. Combustion Emission factors were further divided into Type Engine (Diesel or Steam) and mode of operation (cruise, hotelling, etc.). Available information regarding emission levels (# per 1000 gallons of fuel

consumed) and fuel consumption during various modes of operations was limited and therefore, supplemented with source testing. Petroleum Transfer Emission factors were subdivided into arrival and generated factors by product transferred and previous product in the tank being filled. Arrival emissions are those generated by displacing the vapors in the tank and result from vaporization of the previous cargo and residual left in the tank. Generated vapors are those produced as a result of vaporization of the product being loaded. Fortunately, considerable recent test data was available which, when compiled and analyzed, resulted in what is believed to be highly reliable emission factors.

The activity data collected were reduced, analyzed and compiled on Scott's in-house Univac 90/30 computer system. When combined with emission factors developed, a detailed inventory of emissions within California's Coastal Waters by space, time and emission species resulted. A supplemental task involved reviewing the state-of-the-art of control technology.

3.3.1 Review of Marine Operations

Marine operations along the coastal waters of California occur at numerous ports and terminals, involving both inter- and intra-port movement. Activities, in general, can be broken down into three categories. The first category involves the movement of petroleum products along the coast and into and out of California Coastal Waters. The second category of marine activities involved the movement of other cargos. Other cargos primarily are dry cargos and containerized cargos. The third class was miscellaneous activities which involved military operations, tugs and other small commercial vessel movement.

The three primary areas of activity along the coast of California are San Diego, Los Angeles and the San Francisco Bay area. The Los Angeles area includes the ports of Los Angeles and Long Beach. Close to these two ports are petroleum terminals at Huntington Beach and El Segundo. The San Francisco Harbor area consists of numerous ports and petroleum transfer operations. In between the three major marine activity areas are various smaller harbors and petroleum transfer points. Petroleum transfer points can be associated with a production facility or a receiving facility such as an offshore terminal connected with a power plant. Whether the vessel is carrying a petroleum cargo or dry cargo, the vessel can enter the study area from the north, west or south and proceed to any facility equipped to

handle a vessel of its size. After an activity takes place associated with either handling the vessel's cargo or refueling, the vessel can move to another port facility or leave the study area in one of the three directions mentioned earlier. Many vessels make repeated runs between one location and another location, both within California Coastal Waters. This is very typical with petroleum cargo vessels moving between Los Angeles and San Francisco. Lightering operations during the study period occurred on the leeward side of San Clemente Island. Very large crude carriers (VLCC) enter the study area and anchor off San Clemente. Smaller tankers, called lighters, transport crude oil brought from the Persian Gulf or Alaska from the VLCC to the San Francisco area. Several cases did occur during the study period in which crude oil was lightered to the Los Angeles area. The leeward side of San Clemente Island has been chosen because of adequate draft for VLCC's and protection from ocean winds.

Miscellaneous marine activities occur in all three major harbor areas and, to a lesser extent, in the minor ports along the coast. The military and Coast Guard both operate vessels from the San Diego, Los Angeles and San Francisco Harbor areas. Tug activities assist vessels in all three areas as well as moving cargo between ports. Miscellaneous commercial activities involve the transport of personnel between drilling platforms and other offshore activities requiring water taxis.

3.3.2 Data Generation

The study effort was divided into two distinct categories, as shown below:

1. Emissions attributable to the transfer of petroleum (and products).
2. Emissions attributable to the operation of vessels' power plants.

The objectives of this portion of the program were to define the quantity, type and location of all petroleum transfers which occurred in California during the study year and to detail the type, quantity and location of all fuel consumption by shipboard power plants as documented by the Waterborne Commerce of the United States in California waters during 1976.

The methodology employed to attain these general objectives is described in section 1-Petroleum Transfer Operations, and section 2-Vessel Movement, below.

1. Petroleum Transfer Operations

The emission of hydrocarbon vapors occur when petroleum or petroleum products are loaded into a vessel. As discussed in Section 2.0, this emission is attributable to the vaporization of the product transferred and the vapors within the tanks loaded. Therefore, the most significant emissions are emitted during the transfer of products with relatively high volatility, such as gasoline and jet naphtha. An important consideration in the quantification of emissions from product transfers is the determination of the product which occupied the tank prior to its refilling. This is due to the different concentrations of hydrocarbons in the tank vapor space attributable to different products transported in the tank. The hydrocarbons existing in the tank's vapor space are displaced during the loading operation. Additional hydrocarbons are generated due to the turbulence of the incoming liquid during loading.

An estimate was made of the emissions associated with the following petroleum transfer operations:

A. Product transfer from ship and barge to shore.
B. Product transfer from shore to ship and barge.
C. Transfers between ships and barges.
D. Transfers between ships.

A determination of the emissions associated with operations A and B was made by obtaining ship movement information from the main petroleum transfer locations (i.e., the harbors of San Diego, Los Angeles, Long Beach and San Francisco). This ship movement information indicated the berth at which a loading or unloading activity took place. Through direct contact with each California port, terminal and other oil transfer facilities, the quantity and type of cargo transferred was obtained for each operation in 1976. The ship's name, date of dockage and sailing, in addition to other descriptive and technical information were obtained during this survey. Verification of the information obtained from this survey was accomplished by computer matching of the data regarding ship movements as logged by the Marine Exchanges at each harbor and the engineering data on each vessel obtained from Lloyd's Register of Shipping (and other literature sources) with the vessel movement and petroleum transfer information supplied by the operators of the contacted facilities. This matching served to identify the transfers of each grade of product and formed the basis for computation of emissions relating to these transfers.

With this information in the computer, an identification of the vessels in dedicated service was made to simplify the emission characterization. Emission factors were developed, as discussed in Section 3.3.5, for each product transferred and these factors were adjusted for the vessel's prior cargos. The emission factors were applied to the quantity transferred for each operation to yield the hydrocarbon emission for this category of study.

Vessels which discharge product but do not load product prior to departure are assumed to take on ballast. If the vessel is equipped with segregated ballast tanks, the amount of segregated ballast is subtracted from the total ballast loaded. It is assumed that all ballasting vessels take on 35% capacity. For harbor transit, 21% capacity is taken into the tanks and an additional 14% capacity loaded when the vessel is at sea.

Included in operations C and D is the bunkering of vessels. Bunkering may be performed directly from a barge or by an onshore system such as the one in operation at the Port of Long Beach. This system is composed of a series of pipes which carry bunker fuel to certain berths within the harbor. Information regarding the quantity and type of fuel bunkered was obtained through direct contact with oil companies and other bunker fuel suppliers. As discussed in Section 3.3.5, an emission factor was developed for each type of fuel. This factor was based on information contained in published literature, discussions with knowledgeable persons in the marine industry, and laboratory analysis of bunker fuel and bunker vapor space samples taken during the field portion of this investigation (see Section 3.3.3).

Petroleum transfer operations C and D include lightering activities. Lightering is the transfer of crude oil (or other petroleum products) over water from a deep draft tanker to a relatively shallow draft tanker or barge. This is done because the large crude carriers require deep water due to their draft. There are currently no deep water ports in California and harbor deepening efforts are not projected to be completed for at least ten years.

In 1976, Chevron and Shell conducted lightering off the leeward side of San Clemente Island. Direct contact with each oil company provided the dates, vessels and quantity of crude transferred during these operations. Emission factors were generated and applied to the information supplied, to yield the emissions

Virtually all of the lighters transported crude to their San Francisco Bay Area refineries in 1976. Eighty-seven (87) percent of the lightering was done by Chevron U.S.A., Inc. The lightering tankers which transported the crude to Chevron's Richmond Long Wharf facility had a nominal capacity of 550,000 barrels. These vessels were filled to approximately 80% capacity for transport to the refinery since they have an average draft of >40 feet when completely filled, and the Richmond Long Wharf at Chevron U.S.A. has a depth of 37 feet at high tide.

As discussed in Section 3.3.5, the loading of crude onto vessels is accomplished by "bottom loading", thereby minimizing splashing and resulting in less vapors being generated than other loading practices. The emissions during loading of vessels are attributable to two sources as detailed below:

1. The emissions during the majority of the loading operation result from displacement of the hydrocarbons existing in the tank's vapor space, which are attributable to the vessel's prior cargo. These hydrocarbons are termed the arrival component.
2. The emissions which occur near the completion of the transfer operation include the hydrocarbons which evolve due to the turbulence of the loading operation and the relative hydrocarbon deficiency in the vapor space of the tank. These hydrocarbons are termed the generated component. During loading, the generated vapors develop a hydrocarbon rich blanket which lies at the surface of the crude (or other petroleum product). Typically, this blanket will remain stable during loading until it is eventually displaced to the atmosphere at the end of the transfer. However, if the loading operation is interrupted, the blanket will start diffusing into the remaining vapor space, resulting in the displacement of a higher concentration of hydrocarbons when the filling operation is restarted.

The amount of hydrocarbons emitted during a loading operation is dependent on many variables, such as type of product, loading rate, ship size, tank configuration and temperature, and hydrocarbon concentration in the tanks from the prior cargo. Any of these factors has the potential of greatly influencing the magnitude of the hydrocarbon emissions. A typical emission gradient during a loading operation is presented below.

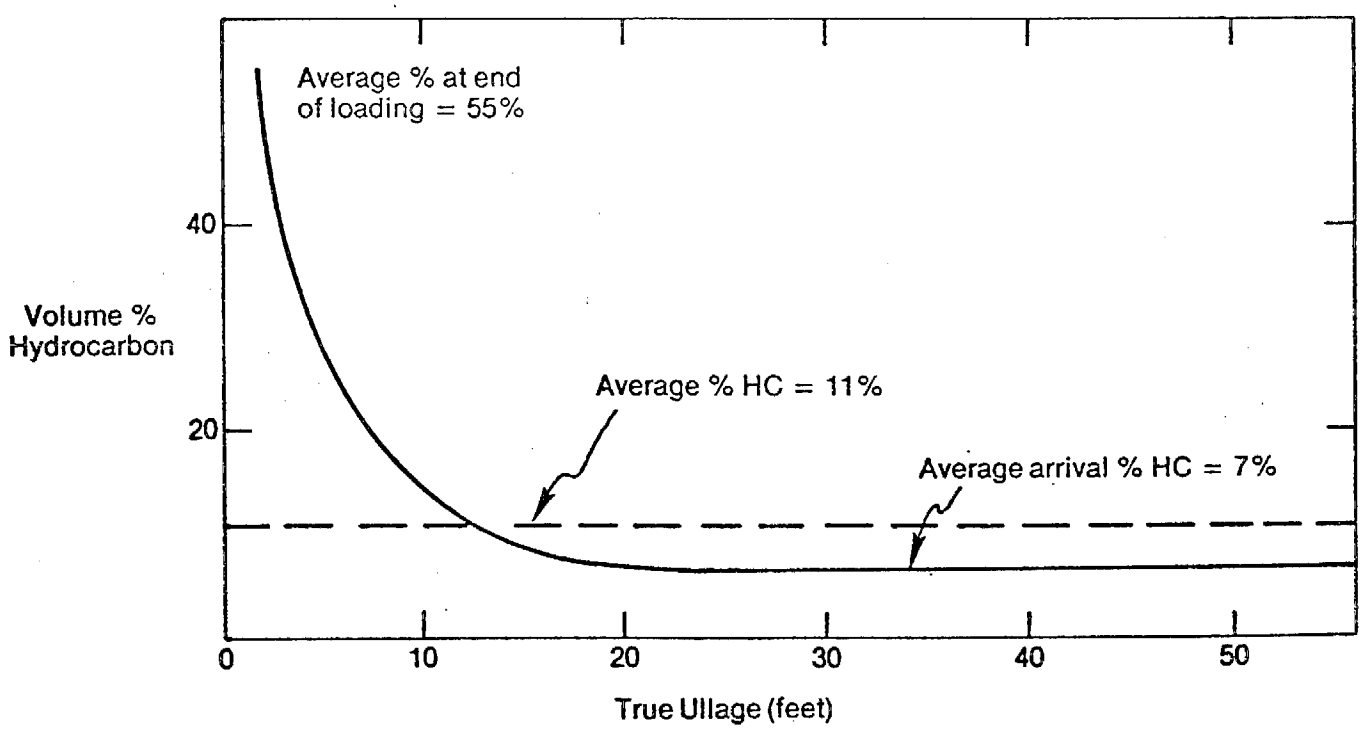

TYPICAL SHIP EMISSION PROFILES

In 1976, since each lighter's tank was filled to 80% capacity, the high concentration, generated component was not emitted to the atmosphere during the initial transfer operation. The vapor blanket was transported to the refinery along with the crude. A vapor processing system was not used to recover these hydrocarbons prior to transfer of the crude to the refinery. Therefore, during vessel unloading, air was pulled into the tanks which mixed with the vapor blanket and formed part of the arrival component for the next

transfer at the crude carrier. At the completion of the transfer at the refinery, typically 21% ballast is taken on to insure vessel stability during harbor transit. A lightering vessel typically has 7% segregated ballast capacity, therefore, the remaining 14% ballast is taken into the cargo tanks. This results in the displacement of a corresponding quantity of the arrival component at the refinery. As the vessel leaves the harbor, an additional 14% ballast is required to attain seaworthiness, which results in a corresponding hydrocarbon emission in the vicinity of the Golden Gate Bridge. As the lighter hooks up to the crude carrier for a second transfer operation, the ballast is transferred to the crude carrier as the crude is onloaded. The emission of hydrocarbons at this location amounts to the displacement of the arrival component by the crude volume which exceeds the ballast volume. The arrival component is composed of the hydrocarbon vapor present in the cargo tank ullage at the prior cargo unloading point and hydrocarbon vapors resulting from the evaporation of oil clingage and heel during the return voyage to the crude carrier. This emission scenario was exercised for each lightering operation that occurred during 1976. A similar scenario was developed for each vessel movement/transfer operation which occurred in the study period.

Barge emissions due to shallow tank depths are significantly higher per unit cargo transferred than tanker emissions. Non-ocean going barges are typically 20 feet in depth. As can be seen in the emission profile chart on the preceding page, average vapor hydrocarbon concentrations are significantly higher during this portion (0-20 True Ullage) of the profile. All barging occurring during the study involved gasoline for which an emission factor higher than tanker transfers was applied.

2. Vessel Movement

The movements of the four vessel categories studied, and the resultant fuel consumption have been determined as described in the following sections. The primary fuel burned by ocean going vessels is high sulfur content (1-5%) residual oil. This fuel is burned by vessels powered by boilers and diesel engines. The diesel engined vessels typically operate in port with #2 diesel fuel which has a much lower viscosity, relatively high vapor pressure, and a lower sulfur content than bunker fuel. Therefore, this fuel is more easily atomized in the combustion chambers of motor vessels and produces less emissions at low power operation than vessels which operate solely on residual fuel. While at sea, these

diesel engines are at temperatures high enough to allow combustion of residual fuel. Some ocean going motor vessels (United States Navy ships, for example) are designed to operate exclusively on diesel fuel, while others such as large slow speed diesels are designed to operate solely with the more viscous, higher sulfur, heavy fuel oil. Many operators of these large diesel engined vessels use the lighter oils for starting and maneuvering while in port for safety considerations.

The smaller diesel engined vessels which do not go to sea typically consume #2 diesel fuel for the operation of their power plants. Many gas turbine engined vessels use #1 diesel as their primary fuel source.

The methodology employed in determining the movements, type of fuel consumed and consumption rates for tankers, cargo vessels, military ships, tugs and small craft are presented below.

a. Tanker and Cargo

The movements of each tanker and cargo vessel occuring in the Los Angeles/Long Beach harbor area was obtained from the Los Angeles Harbor Marine Exchange. This information is broken down as follows:

1) Vessel name
2) Vessel flag
3) Vessel type
4) Net tons
5) Time of arrival, departure, in harbor movement
6) Agent
7) Berth
8) Arrived from, departed to
9) Date

Similar information was obtained from Port Hueneme, the San Diego Unified Port District, the San Francisco Marine Exchange and the other California ports. A summary of all California ports is shown in Table 3.1.

The San Francisco Marine Exchange logs each vessel that passes under the Golden Gate Bridge and records its movements while in the bay. However, there is interbay activity which does not go to sea and therefore would not be recorded by the Marine Exchange.

TABLE 3.1
CALIFORNIA PORTS

1. San Diego Unified Port District
2. Port of Long Beach
3. Port of Los Angeles
4. Oxnard Harbor District (Ventura County)
5. City of San Buenaventura (Marine Terminal) (Ventura County)
6. City of Carpinteria (Marine Terminal) (Santa Barbara County)
7. Port San Luis (Union Oil wharf) (San Luis Obispo County)
8. Navy Terminal - Estero Bay - San Luis Obispo County
9. Moss Landing Harbor District, Monterey County
10. Port of San Francisco
11. Port of Oakland
12. Port of Redwood City
13. Port of Richmond
14. City of Benicia (Benicia Industries Terminals)
15. Port of Stockton
16. Port of Sacramento
17. Humboldt Bay, Humboldt County (Cities of Eureka and Arcata, and Humboldt Bay Conservation, Recreation and Harbor District)
18. Crescent City Harbor, Del Norte County

The U.S. Coast Guard in San Francisco Harbor maintains a radar operated vessel tracking system in the bay in which the movement of each vessel is followed and recorded. The information available for 1976 included a monthly breakdown of thirteen classes of vessel movements as intrabay, inbound and outbound. Individual ship movement history was not available for 1976. Therefore, in order to estimate the duration of each intrabay movement the individual ship movement history for 1978 was obtained. The movement of each vessel, occurring during one summer and one winter month, was plotted to:

A) determine average trip duration by vessel class

B) establish typical spatial distribution of movements

The average trip duration for each class of vessel investigated was then applied to the monthly intrabay 1976 ship movement totals to yield an estimated hours of intrabay operation for each category of vessel broken down by month. Through personal contact with ship operators and supplemented by data from Scott's vessel engineering files and Lloyds Register of Ships the typical fuel consumption rate was determined for each vessel. By multiplying this rate by the estimated hours of operation, the total fuel consumed by vessels during intrabay activities was established.

The vessel arrival and departure data obtained from each port was used to plot (by computer) the movement of each ship while in California waters. The engineering data for each ship entered into the computer included the size and type of the vessel's powerplant as well as the type of fuel burned and the consumption rate at various power factors. Typical power factors were entered into the computers for all routes travelled by ships. For example, a tanker leaving Long Beach harbor with a destination of San Francisco typically would encounter various power requirements (and therefore, fuel consumption rates) during the trip as shown below:

Date	Time Period	Activity	Bbl/Hr
11-8	1821-1902	Long Beach Harbor-Pumping	7.58
11-8	1902-2028	Long Beach Harbor-Standby	3.91
11-8	2028-2110	Long Beach Harbor-Standby	4.14
11-8	2110-2227	Long Beach Harbor-Transit	9.84
11-8	2227-2320	Harbor-Sealane Transition	15.71
11-9	2320-0204	Sealane-Full Power	26.90
11-9	0204-0348	Sealane-Full Power	27.72
11-9	0348-0804	Sealane-Full Power	26.21
11-9	0805-1136	Sealane-Reduced Power-Storm	23.98
11-9	1136-1840	Sealane-Reduced Power-Storm	23.48
11-9	1840-2112	Sealane-San Francisco Bay Transition	19.54
11-10	2112-0148	San Francisco Bay Transit	14.36
11-10	0148-0249	Avon, California-Standby	4.07
11-10	0249-0926	Avon, California-Hookup and Pumping	6.20

The fuel consumption for each vessel movement in 1976 is then calculated by applying the power factor for each mode of operation along the route (ie. harbor transit, sealane etc.) to the vessels fuel consumption rate as documented in Lloyds Register of Ships and Clarkson's The Tanker Register to yield the total fuel consumed on one trip. Every vessel was tracked by Scott's computer as it moved along the California coast.

The exercise detailed above was performed for every vessel movement which occured in California waters during 1976.

b. Military

An estimate of the fuel consumption of military vessels operating in the study area was obtained from the Commander of the Naval Sea Systems Command in Washington, D.C. for 1977 and 1978. No information was available for 1976. This information was broken down into auxiliaries, combatants, amphibious and miscellaneous vessels and included the fleet steaming hours for each class of vessel. Also supplied was a list of fleet units home ported in California waters and the quantity of fuel issued to fleet units from California supply depots during this period. Since there was a 7% increase in fuel consumption from 1977 to 1978, this rate was used to project the quantity of fuel used by military vessels in 1976.

Nearly all fleet units have been converted to burn Diesel Fuel Marine in shipboard boilers and diesel engines. This is reportedly a relatively clean burning fuel with an average sulfur content of 0.27%.

Included in the military vessel category are the operations of the U.S. Coast Guard. Two Coast Guard districts operate along the California coast. The eleventh district operates from the southern boundary of California to a point nominally 100 miles north of Santa Barbara. The twelfth district operates in California waters north of the eleventh district. Each district supplied the estimated fuel consumption for their vessels operating in the study area during 1976.

c. Tugs

Each towboat company operating along the California coast in 1976 was solicited for information regarding the type and quantity of fuel consumed as well as the engine size and hours of operation of the tugs(Table 3.2). From the information obtained, a data base was established relating the tugs' horsepower to fuel consumption for three levels of power as shown in Figures 3.2, 3.3 and 3.4. This data base was utilized to estimate fuel consumption when complete information was not available.

In the South Coast Air Basin, the fuel consumed by tugs operating along the coast was typically calculated by multiplying the average consumption rate supplied by each tug operator by the number of hours operating in southern coastal waters.

In 1976 Los Angeles/Long Beach harbor was visited 246 times by barges. A high percentage of these visits were by barges bringing lumber and paper products from Oregon, Washington and British Columbia. Ordinarily, an hour's worth of fuel consumption was computed for coming into the harbor and docking. One hour was counted in leaving the harbor. An hour's worth of fuel was also computed for any transfers within the harbor. Frequently, barges came in tandem. This means that two or more barges are towed by a single tug. The usual procedure when a tug with two barges in tow arrives is to anchor one barge, proceed through the harbor with one barge, then return for the other one later. When this happened, a total of four hours of fuel consumption were computed per visit rather than just two.

The data obtained from the Marine Exchange indicates:

1) All tug visits
2) Tugs with tows
3) Tandem tows
4) Name of vessels
5) Arrival and destination ports
6) Harbor movements

In order to estimate fuel consumption when towboat operators available information was inadequate, the following scenario was exercised.

A tug under tow typically travels at a rate of 6.5 knots. At this rate, it takes approximately 19.2 hours to traverse the South Coast Air Basin from the entrance to the Los Angeles/Long Beach harbor to Point Conception.

TABLE 3.2

TOWBOAT COMPANIES

Company	Location	Notes
Donahugh Boat Service	San Pedro	5gph, 2hpd 2% out of harbor
San Pedro Tugboat Co.	San Pedro	15-20gph, 250-300 hr/wk
Sauce Bros. Ocean Towing	San Pedro	70-100gph
United Towing Co.	San Pedro	14gph, 690 hr/mo
Wilmington Transportation Co.	San Pedro	39,000 gal/mo
Crowley Derrick Barges	Long Beach	1,538 hr, 800 HP
Jone Tug & Barge	Long Beach	60,000 gal.
Karsvig	Long Beach	
Submarine Engineering	Newport	6gph 1,000 hr/yr
Seaway of California	Catalina	26gph 84/wk
Pacific Towboat & Salvage		No operation in 1976
Nevada Tug & Barge		
Sea Service International		
Universal Marine	Long Beach	10 gal/hr, 16 hr/wk
Slackwater Towboat Co.	Richmond	
Western Tug & Barge	Richmond	205,435 gal, 1,000 HP
Westov Towboat Service	San Francisco	
Southhampton Towing	Vallejo	
Shaver Transportation	San Francisco	
Shipowners & Merchants	San Francisco	
Marine Engr. Assoc.	San Rafael	
Harbor Tug & Barge Co.	San Francisco	200,000 gal
Fedpac International Inc.	San Francisco	
Crowley Maritime Corp	San Francisco	2,877,000 gal
Bay Cities Transp. Co.	San Francisco	
Oregon Coast Towing	Boos Bay	

Figure 3.2

Fuel Consumption for Tugs
Ship Assistance Tugs (20%)

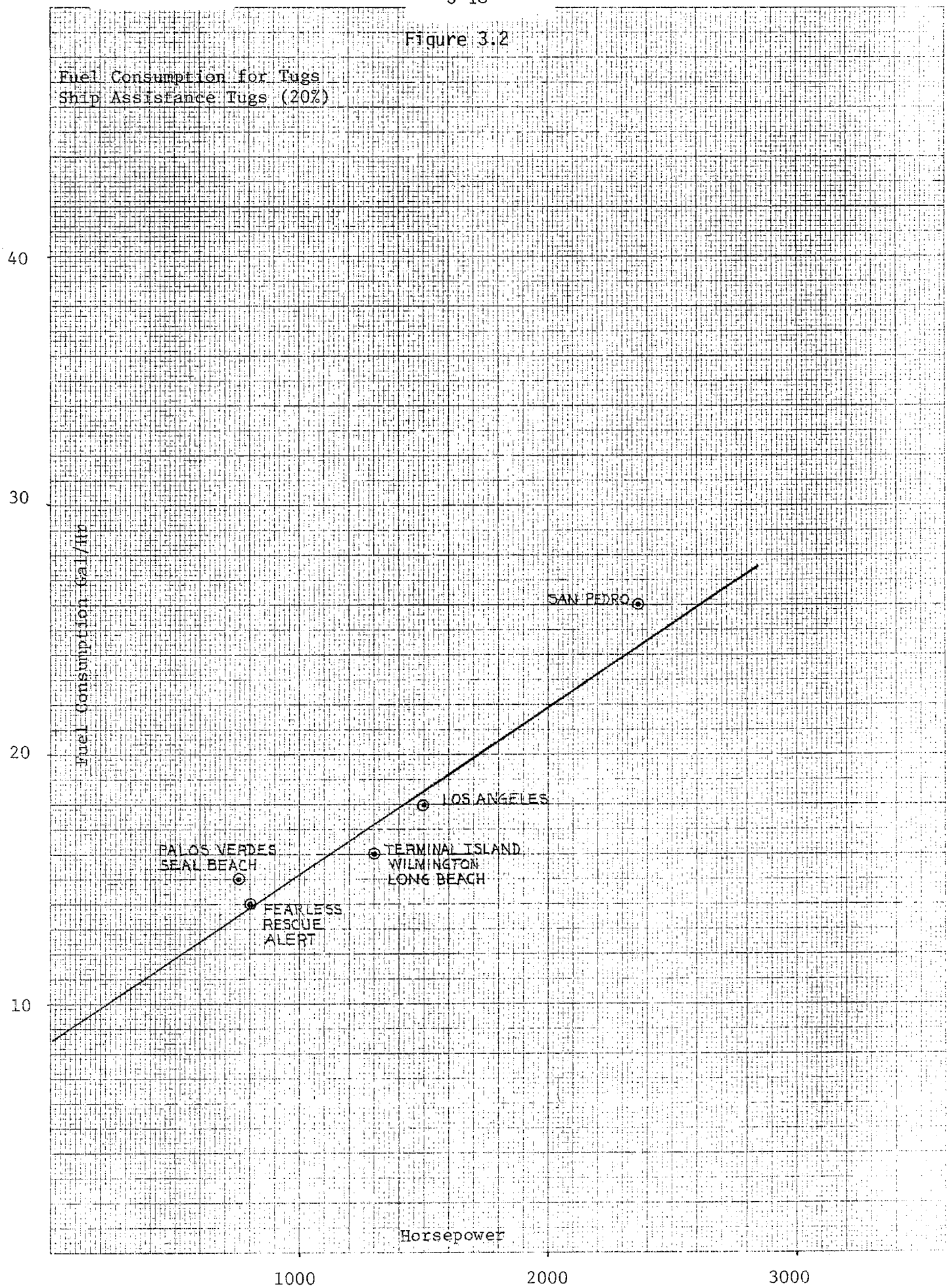

10 X 10 TO THE CENTIMETER 46 1510
18 X 25 CM MADE IN U.S.A.
KEUFFEL & ESSER CO.

Figure 3.3

Fuel Consumption for Tugs

Moderate Activity (Tow Barge and Tend)

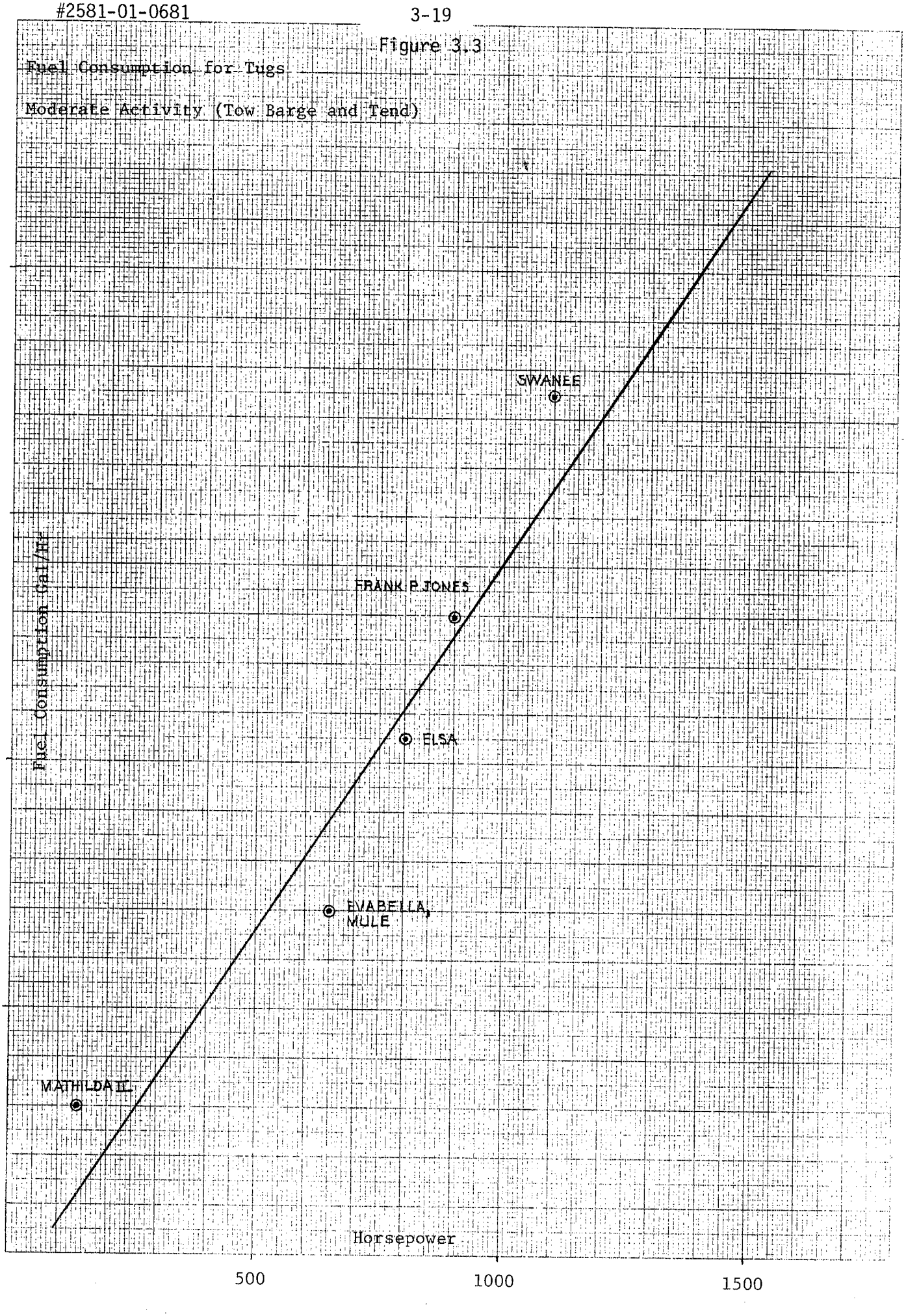

10 X 10 TO THE CENTIMETER 46 1510
18 X 25 CM. MADE IN U.S.A.
KEUFFEL & ESSER CO.

Figure 3.4

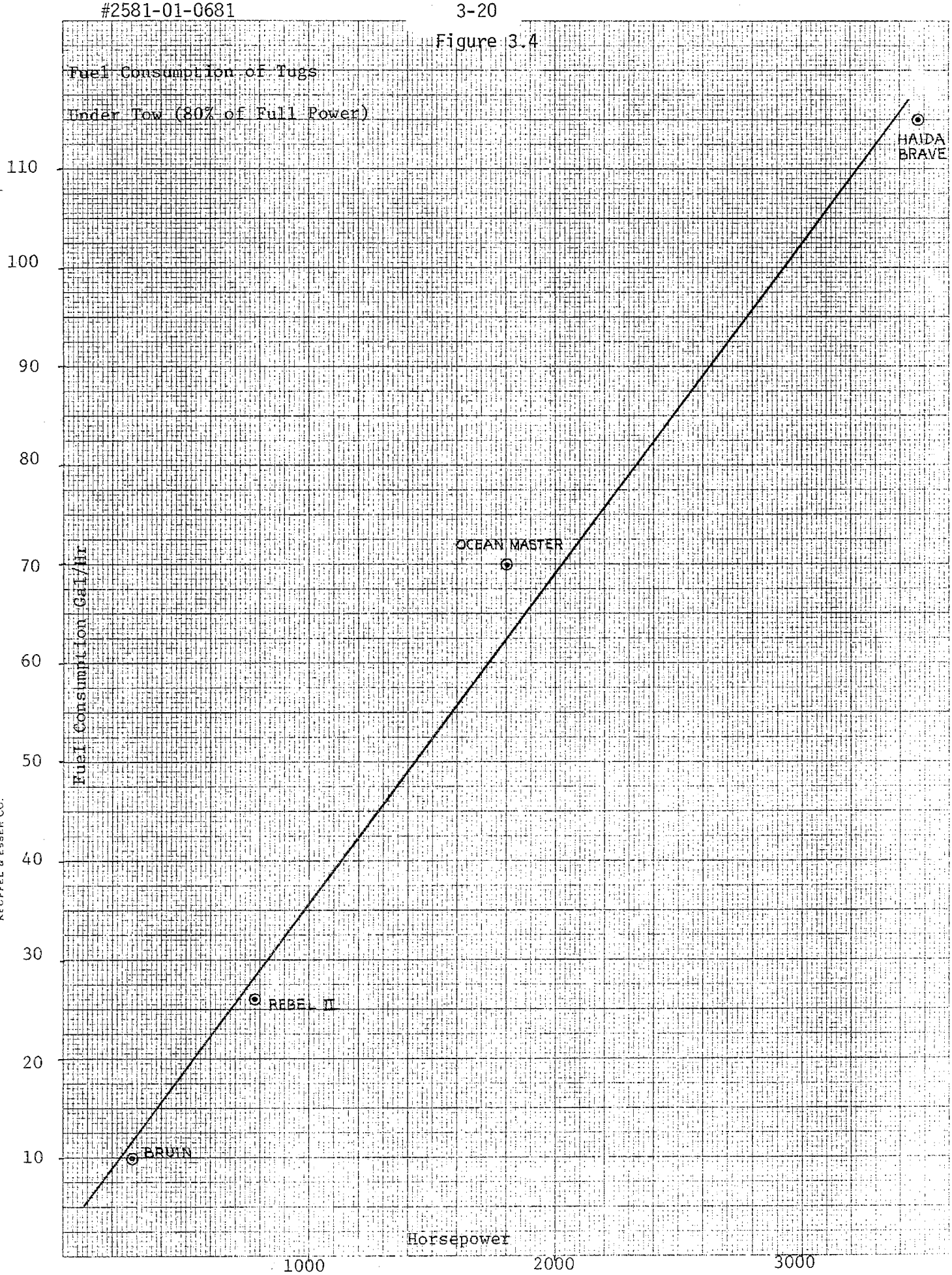

K&E 10 X 10 TO THE CENTIMETER 46 1510
18 X 25 CM. MADE IN U.S.A.
KEUFFEL & ESSER CO.

Similarly, the journey between the Los Angeles/Long Beach harbor to the San Diego county line requires 6.4 hours and from Port Hueneme to Point Conception takes 9.6 hours.

It takes a tug 11.2 hours to go from the Los Angeles/Long Beach harbor to the western boundary of the South Coast Air Basin on its way to ports such as Honolulu. When Marine Exchange data indicated a tug or barge left the Los Angeles/Long Beach harbor from points north, one trip from San Diego to Point Conception was assumed. This trip across the South Coast Air Basin takes 25.6 hours.

The consumption rate for an oceangoing tug is estimated as 100 gallons per hour when the exact consumption rate is not known. In harbor, the consumption rate is assumed to be 70 gallons per hour.

Tugs not under tow consume essentially the same quantity of fuel as those towing barges, therefore, these solo visits are computed exactly the same as the consumption for coastal barge traffic.

It was not necessary to compute fuel usage by U.S. Navy tugs since the total fuel used during 1976 was reported by the Navy. The civilian tugs operate with No. 2 diesel fuel while Naval vessels use a special bunker fuel described as an all purpose, low sulfur medium distillate which is burned in steam and motor vessels as well as truck engines.

Additionally, tug traffic at the small ports and offshore terminals were investigated to determine the quantity of fuel combusted at these locations. The results of this investigation are summarized in Table 3.3.

The fuel consumption attributable to tug activity outside of the South Coast Air Basin was also determined through a survey of towboat companies. In 1976, numerous tug operators were active in the San Francisco Bay area. Most of these companies are currently owned by Crowley Maritime. Data on fuel consumption for 1976 obtained from Crowley, supplemented by similar information relating to the two other major tug operations at that time (i.e., Western Tug and Barge and Harbor Tug and Barge) provides an estimated 95% of all harbor tug activity in this area. Additionally, Crowley Maritime was reportedly the sole operator of oceangoing tugs in the Bay Area during 1976. The fuel usage reported for their oceangoing and river tugs therefore supplies the total consumption for this vessel type.

TABLE 3.3

SOUTH COAST AIR BASIN

Site	Tug Fuel Consumption Gallons
Getty Terminal, Ventura	2900
Union Terminal, Ventura	4600
Redondo Beach Harbor	0
Ventura Harbor	0
Santa Barbara Harbor	0
Chevron Terminal, Carpenteria	3600
Terminal, Coal Oil Point	1400
Getty Terminal, Gaviota	200
TOTAL FUEL CONSUMED	22700

The tug operations in San Diego were defined through direct contact with Pacific Towboat and Salvage. This tug boat operator accounts for >90% of the non-military tug activity in San Diego. Information supplied by this operator yielded the estimated fuel consumption for the San Diego Harbor area.

Towboat activity and the corresponding fuel consumption at Port San Luis, Avilla Beach, Moss Landing, Morro Bay and Estero Bay were obtained from the sole tow boat operator in these areas, Anton Sylvesters Tow Boat.

d. Small Craft

Small craft are defined as commercial passenger carrying vessels such as tour boats and water taxis which conduct operations including the transportation of crewmen to offshore oil platforms and sightseeing trips. Only vessels recorded by the Waterborne Commerce of the United States are included in this study. Documentation of these vessel movements in the San Francisco Bay Area was obtained from the U.S. Coast Guard Vessel Tracking System (as discussed in Section 3.3.2. This data incorporated intra-bay activity broken down into monthly totals for 1976. Identification of the actual vessels in use was obtained through investigation of the daily movement log for 1978 (the daily movement log for 1976 was unavailable). Subsequent personal contact was made with the vessel operators to define:

1) Vessel power plant types
2) Proportion of usage in 1976
3) Type of fuel consumed
4) Consumption rate
5) Traffic patterns

The resultant information was reduced to yield the total fuel consumed by this class of vessels in the Bay area during 1976.

Contact with individual small craft operators was necessary to establish the fuel usage attributable to these vessels in the remainder of the state. The total small craft trips obtained during this survey were added to the other vessel (tankers, cargo) movements from each port in order to verify the accuracy of tye survey response with the data contained in the Waterborne Commerce of the United States. The survey revealed the vessels' engine size and type, fuel burned, average consumption rate, number of trips in 1976, average trip duration, and the areas in which each vessel operated. The

actual volume of fuel consumed was then determined by multiplying the average consumption rate by the number of hours of operation for each vessel and summing the results.

3.3.3 Testing

In order to define the emissions attributable to tankers during transport and offloading operations, Scott conducted testing of three vessels under typical operating conditions. These vessels were the Austin, ARCO Sag River, and the ARCO Fairbanks. The testing encompassed power plant and petroleum transfer operation emissions as shown in Table 3.4.

TABLE 3.4

SUMMARY OF TEST PROCEDURES

Power Plant Emissions:

Gas Constituent	Test Procedure
Particulates, H_2O, Gas Flow Rate	Modified EPA Method #5
SO_2 and H_2SO_4	EPA Method #8
NO and NO_x	Philco-Ford Chemiluminescent continuous analyzer
CO	Ecolyzer Electrochemical continuous analyzer
Hydrocarbons	Scott Heated Flame Ionization continuous analyzer
Oxygen	Beckman Polarographic continuous analyzer

Petroleum Transfer Operations Emissions:

Gas Constituent	Test Procedure
Hydrocarbons	MSA Gascope with gas chromatograph for calibration of gascope and reactivity

A special instrument package was designed and used to obtain continuous concentration levels of oxygen, carbon monoxide, oxides of nitrogen and hydrocarbon levels during offloading operations. The instrument package is illustrated in Figure 3.5. EPA Method #8 and ORSAT analysis were used to determine sulfur dioxide, moisture, and carbon dioxide levels. Additional information on boiler operations during each test period was obtained from the engine room log and laboratory analysis of fuel and boiler gas samples.

The results of three tanker offloading tests are contained in Table 3.5. The significant difference in emissions levels for each power system can be related to cargo inerting system requirements. The two marine power systems with inerting requirements were required to control oxygen at 5%. Less oxides of nitrogen and slightly more carbon monoxide emissions were generated at the lower oxygen level as compared to the non-inert boiler system. Also, more boiler upsets were noted for the marine power boilers with inerting systems; a result of the tighter oxygen control requirements.

This testing program provided data which demonstrates the emissions generated during offloading operations of three classes of vessels. The T-2 type tanker, typified by the Austin, conducts much of the marine traffic within California harbor areas. The emissions associated with intermediate sized vessels (50-100K DWT) is represented by the ARCO Sag River. The modern, large vessels (>100K DWT) power plant emissions during pumping operations are demonstrated by the results of testing the ARCO Fairbanks.

Emission measurements of CO, O_2, CO_2, SO_x, NO_x and HC were also made on the boiler exhaust of the ARCO Sag River under the varying modes of operation encountered during transit. These measurements were conducted during a profile run of this vessel from Long Beach, California to San Francisco, California. The log of this run is presented in Table 3.6.

The performance of this set of tests provided the basis for the calculation of emissions during tanker transit modes as well as verifying the emissions encountered during pumping operations. This testing also verified the full power fuel consumption rates published in the Tanker Register and detailed the fuel consumption during varied operational modes.

The exhaust gas concentration of CO_2, SO_2 and H_2O and the gas flow rates were calculated using the fuel analysis, the fuel firing rates and the concentrations of O_2, CO and NO_x. These calculations are based on the combustion

FIGURE 3.5 - MARINE TESTING INSTRUMENT SYSTEM

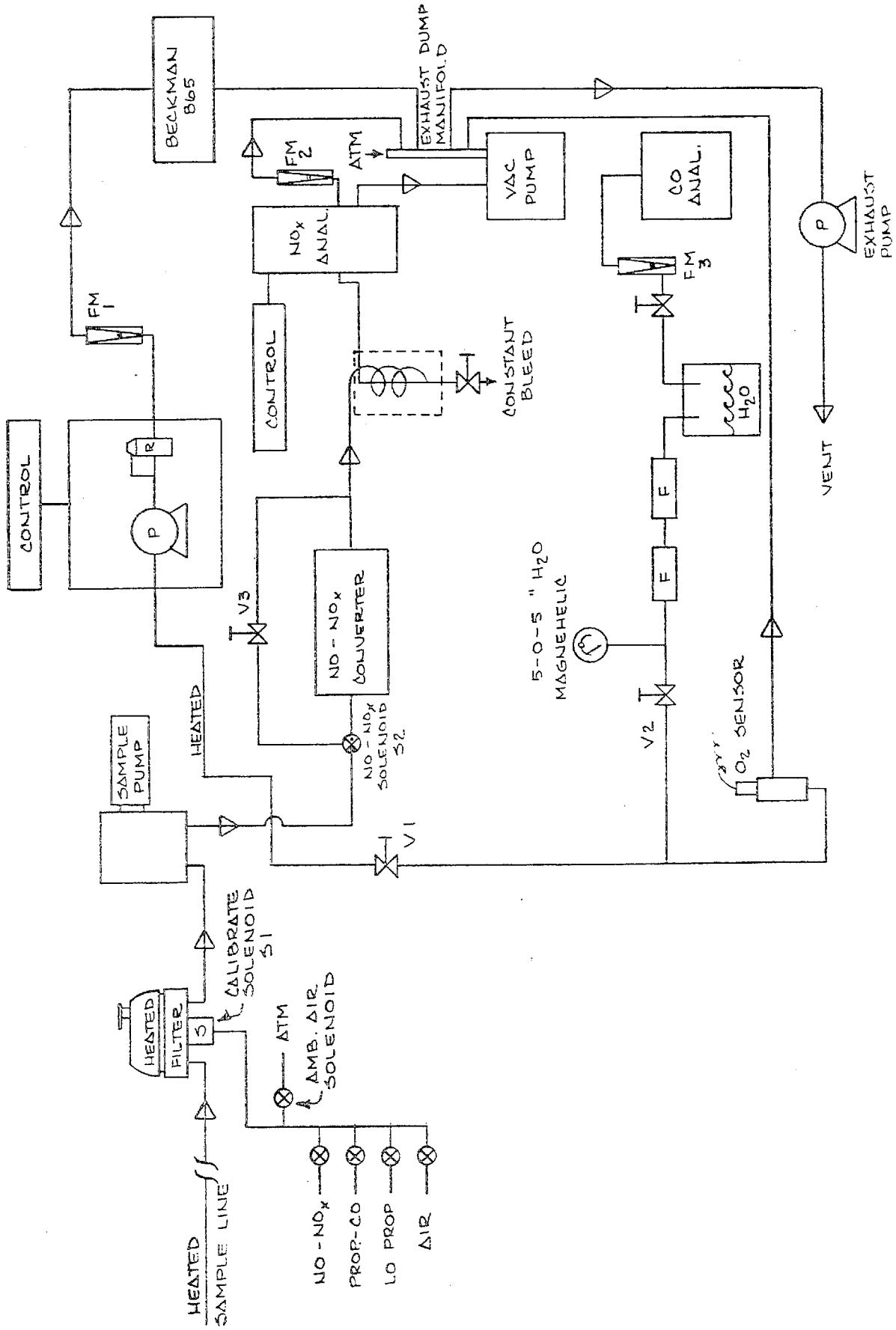

TABLE 3.5

MARINE POWER PLANT TEST SUMMARY

TEST NUMBER:	1	2	3
Date:	9-6-78	10-4-78	10-7-78
Tanker:	Austin	ARCO Sag River	ARCO Fairbanks
Berth:	LA Berth #168	LB Berth #78	LB Berth #118
Main Power Plant	Turbine-electric	Steam Turbine	Steam Turbine
Hp:	7,000	18,000	26,000
Year Built:	1945	1972	1974
DWT:	27,000	70,000	120,000
Inerting System:	No	Yes	Yes
Fuel Analysis			
API @ 60:	9.6	15.5	15.9
Ash %:	0.048	0.016	0.016
Sulfur %:	1.56	1.56	1.58
Carbon %:	86.60	86.57	85.98
Hydrogen %:	10.50	11.16	11.96
Nitrogen %:	0.67	0.29	0.21
Method #8			
SO_2	562.6 ppm	747.8 ppm	706.3 ppm
SO_3	--	Unable to Analyze	Unable to Analyze
Instrument (Avg.)			
CO	1.0 ppm (lab)	63.0 ppm*	5.3 ppm (lab)
O_2	8.8%	5.25%	4.8%
NO_x	304 ppm	188 ppm	194 ppm
Hyc.	3.1 ppm	2.3 ppm	2.5 ppm
ORSAT			
O_2	9.0%	6.6%	4.8%
CO_2	9.3%	12.7%	13.5%
Lab Analysis			
CO	1 ppm	--	5.3 ppm
C_1	1.3 ppm	1.3 ppm	2.7 ppm
C_2	0.3 ppm	0.1 ppm	Nil
C_3	0.1 ppm	0.2 ppm	0.1 ppm
Boiler Gas			
Temperature	344°F	274°F	285°F
Moisture	14.14%	--	--
Fuel Consumption During Testing:	7 Bbl/hr	8.7-13.2 Bbl/hr	10.5-15 Bbl/hr
Pumping Rate:	Variable	9500 Bbl/hr.	2 pumps operating
Ship Operation:	Offloading Refined prod. No on-loading Ballasting to 30% for sea.	Part. Offloading Alaska Crude Remaining cargo Transported to S.F. Bay area.	Part. Offloading Alaska Crude Remain-cargo Transported to S.F. Bay area.

* Both the electrochemical and NDIR CO instruments had indicated interference problems.

TABLE 3.6

ARCO SAG RIVER PROFILE TEST
RUN LOG LONG BEACH - SAN FRANCISCO, CA

Date	Time Period	Activity	Bbl/Hr	Percent Full Power
11-8	1821-1902	Long Beach Harbor-Pumping	7.58	28.9
11-8	1902-2028	Long Beach Harbor-Standby	3.91	14.9
11-8	2028-2110	Long Beach Harbor-Standby	4.14	15.8
11-8	2110-2227	Long Beach Harbor-Transit	9.84	37.5
11-8	2227-2320	Harbor-Sea Lane Transition	15.71	59.9
11-9	2320-0204	Sea Lane - Full Power	26.90	102.6
11-9	0204-0348	Sea Lane - Full Power	27.72	105.8
11-9	0348-0805	Sea Lane - Full Power	26.21*	100.0
11-9	0805-1136	Sea Lane-Reduced Power-Storm	23.98	91.5
11-9	1136-1840	Sea Lane-Reduced Power-Storm	23.48	89.6
11-9	1840-2112	Sea Lane-San Francisco Bay Trans.	19.54	74.6
11-10	2112-0148	San Francisco Bay Transit	14.36	54.8
11-10	0148-0249	Avon, California-Standby	4.07	15.5
11-10	0249-0926	Avon, Calif.-Hookup and Pumping	6.20	23.7

*Actual Consumption Rate = Tanker Register Published Rate @ Full Power.

of the fuel using the O_2 concentrations to determine the amount of excess air. The H_2O concentrations, gas flow rates, and gas molecular weight are determined from data obtained during the particulate sampling.

Using the gas concentrations and flow rates, mass flow rates for particulates, NO_x, SO_2 and CO were calculated for each of the ships' engine modes. The pollutant flow rate units include pounds per standard cubic foot of exhaust gas, pounds per thousand gallons of fuel, and pounds per BTU input. Emission factors in pounds per thousand gallons of fuel were then calculated. The field test data and operational data for the ships' boilers is included in Appendix C.

A look at the complete operating cycle of a tanker was made during the completed profile test. The following general observations were made during the test:

A. During pumping operation, boiler emissions were stable (low hydrocarbon and CO levels combined with high NO_x levels) with relatively few boiler upsets. Normally, these upsets corresponded to sudden pumping load shifts and the low O_2 level requirement of the inerting system.

B. Frequent and continuous high levels of hydrocarbons and CO were noted during all harbor maneuvering and low level power requirements.

C. The greatest emission stability was noted during maximum power output at sea. The reduction of power during storm conditions modified the emissions slightly. In general, Scott found considerable power plant instability and emissions whenever power requirements were reduced.

Two samples of bunker fuel were taken at each marine power plant test. One sample was used for laboratory analysis and the second sealed sample was held as a backup. A verification of bunker emission characterization was made on one of the backup samples. A sample from the October 7, 1978 test on the ARCO Fairbanks was analyzed for vapor emission characteristics at 80° and 160^oF. Samples of the head space gas (20 cc) were removed by a syringe through a system installed in the sample container cap. The sample was anlyzed for hydrocarbon components by gas chromatography at 80^oF. The head space gas consisted mainly of C_1 to C_4 hydrocarbons at an absolute concentration of approximately 0.2 molecular percent. Methane was the major component which may have been the result of solubility occurring during the refining process. When the sealed bunker sample was heated to 160^oF, a second sample was removed and analyzed.

A major shift to C_{10}+ components was observed with a total absolute concentration of approximately 0.3 molecular percent. A lighter fraction desorbing from the bunker fuel was not observed.

The analysis of the hydrocarbon vapors above the surface of the heat treated bunker fuel indicated the absence of a lighter petroleum fraction within the bunker fuel. A considerable number of additional samples would be required to verify a uniformly low hydrocarbon emission for bunker C products.

The test procedures followed in determining the emissions of hydrocarbons from cargo tanks were developed by the WOGA Task Force on Marine Loading Emissions for the measurement program conducted by Chevron Research in Ventura County during 1977. Emissions from the cargo tanks are monitored using a MSA Gascope. Periodically, samples are also collected for subsequent analysis by gas chromatography to provide hydrocarbon concentration and composition information on the vented vapors. This information is used to verify the Gascope readings and to calculate the hydrocarbon reactivities. The total volume of vapors released is based on the quantity of cargo or ballast loaded and calculations of the generated vapors from the above measurements.

During loading operations involving generated vapors, Gascope readings were taken at the following intervals:

1. Greater than 20 feet true ullage - Readings every 4 feet
2. 20 feet to 10 feet true ullage - Readings every 2 feet
3. 10 feet to final true ullage - Readings every 1 foot
4. Readings at oil surface 30 minutes after loading completed.

Seven vapor samples were collected in evacuated glass containers during the loading, comprising three of arrival vapors and four of generated vapors.

The results of the tests of emissions from cargo tanks were used to calculate total emissions for the specific loading tested and to develope emission factors in pounds of hydrocarbons per 1000 gallons of cargo or ballast loaded for each of the three hydrocarbon reactivities.

3.3.4 Engine Power Factor

Engine power factor refers to the amount of power used by a vessel in various operating modes as compared to the rated power of the vessel. The rated power of a vessel occurs at 100% of engine power and will propel the vessel at its rated speed. The rated power and speed and corresponding fuel consumption for all vessels are published in Lloyd's Register of Shipping (1) and Clarkson's Tanker Register (2). These volumes contain a complete description of each vessel, including engineering data which describes in detail the vessel's engines, auxiliary engines, the type and amount of fuel consumed, and other useful data. By registry terminologies, 100% fuel consumption occurs at rated speed and is given in terms of long tons of fuel consumed per day (24 hours). Fuel consumption has been assumed to be directly proportional to the engine power output.

Power usage is primarily dependent upon two parameters; type of engine and operating mode. Engineering data obtained provided a determination as to whether each vessel was powered by a diesel engine or steam boiler (1, 2). Operating modes of each vessel have been broken down into the following conditions:

- Cruise
- Sea Lane To Harbor (Transit)
- Maneuvering (In Harbor)
- Hotelling (At Berth)
- Cargo Discharge (Tankers Only)
- Chargo Heating (Tankers Only)
- Lightering (Tankers Only)

Except for the cruise and cargo discharge condition, factual information concerning the power required to operate at each condition was very limited. Other sources (3, 4, 5) did provide some estimates of power usage however, the most useful information obtained was by surveying vessel owners, vessel operators, harbor pilots, marine architects, and engineers in order to arrive at realistic and reasonable power factor estimates. Measurements taken during actual vessel operations were used to verify and supplement information solicited. Power factors associated with vessel types and operating modes are presented in Table 3.7.

TABLE 3.7

MARINE VESSEL POWER REQUIREMENTS

TYPE VESSEL		CRUISE	TRANSIT	MANEUVERING	HOTELLING	CARGO HEATING	OFFLOADING
TANKER	STEAM	100	68	43	20	(25%)	1.4# Fuel/Ton Cargo
	MV	100	68	58	20	(25%)	1.4# Fuel Ton Cargo
CARGO SHIP	STEAM	100	60	35	12		Included in Hotelling
	MV	100	60	50	12		Included in Hotelling =
PASSENGER SHIP	STEAM	100	80	55	32		
	MV	100	80	55	32		

Numbers presented represent percent of full power required for respective mode of operation.

Cruise

Cruise refers to the maximum (rated) speed in nautical miles-per-hour (knots) at which a vessel operates while at sea unconfined by coastal or harbor restrictions. While a vessel is in the cruise mode the engine is operating at 100% power output. Within the study area this condition only occurs when a vessel reaches a sea lane. Although cruise (rated) speed occurs with the vessel loaded, for the purposes of the study this condition was considered to exist regardless of the cargo status of the vessel (loaded, unloaded or partially loaded).

In addition to propelling the vessel, the rated power includes that required for hotelling and petroleum cargo heating, if applicable, while the vessel is underway.

Transit

Transit refers to the power used by a vessel when the vessel leaves a designated sea lane and proceeds to the entrance of a port. Transit also refers to the reverse condition from a port entrance to a sea lane. For the purposes of the study, a transit power condition was also assumed for certain local inter-harbor movements not requiring a vessel to enter a designated sea lane such as Los Angeles Harbor to El Segundo. The survey conducted indicated the average vessel's power consumption in this mode of operation was 60% of the cruise mode. This power requirement includes hotelling demands for tankers and cargo ships. In the case of passenger ships, an additional 20% of power is required due to extra hotelling demands required to support passenger activities. As shown in Table 3.7, additional power during transit is required by tankers as compared to cargo vessels. This extra demand is associated with cargo heating which is discussed in a subsequent section.

Maneuvering

Maneuvering refers to the movement of a vessel within the boundaries of a harbor. This activity occurs during port entrance to berth movement (and the reverse) and berth-to-berth movements. Contacts with ship builders and operators indicated that a steamship operates at approximately 35% rated power during this mode and a motor vessel at 50% rated power. The larger power

requirement for a motor vessel was attributed to the fact these type engines are generally not operated at power settings less than 50% and are actually overpowered during maneuvering operations.

Hotelling

Hotelling refers to that mode of a ship's operation when the vessel is in port. Hotelling power requirements vary considerably with vessel size and type. Passenger vessels experience larger power demands during hotelling than other ships owing to power consumed by lights, heating or air conditioning, food storage and refrigeration, etc. Among steam powered tankers and cargo vessels, hotelling power requirements were found to vary between 8% and 13%. A computed weighted average of 12% was used.

Diesel powered vessels utilize auxiliary engines during hotelling. Most often, the auxiliary engines are small boilers (referred to as "donkey boilers") which reportedly are approximately 12% of the main engine's maximum power rating and usually burn #2 diesel fuel.

As shown in Table 3.7, an additional 8% power has been added to tankers to compensate for cargo heating. Also, due to the extra power requirements of passenger ships previously discussed, an additional 20% of rated power was added for hotelling by passenger ships.

Cargo Heating

Correspondence with knowledgeable individuals indicated that approximately 25% of a vessel's rated power may be used to heat or maintain the temperature of certain petroleum cargos (6). Cargo heating is a special situation applicable to tankers whose cargos must be heated to a certain viscosity in order that the cargo be capable of being pumped ashore.

It was reported that one-third of all petroleum cargoes require such treatment (6). Our assumptions therefore include that one-third of all tanker hauling operations require heating and one-third of 25%, or 8% power, was added to other power modes for cargo heating. For example, a maneuvering cargo steamship requires 35% power; maneuvering a comparable tanker on the average required 43% of rated power.

As reflected in Table 3.7, 8% additional power has been added to transit, maneuvering and hotelling power requirements in the case of tankers.

Cargo Offloading

Dry cargo vessels use little more than hotelling loads during offloading. Container vessel cargo is removed by dockside cranes and hoists requiring none of the vessel's power. Other types of dry cargo vessels may utilize modest amounts of power to assist in offloading cargo, but generally this power usage is very small.

Tankers utilize considerable power in offloading liquid cargo. Typically, these vessels contain a number of steam-operated centrifugal pumps rated in their capacity to raise a certain number of tons of water per hour to a certain height. During the year under study, no tankers larger than 140 DWT were encountered. Examination of the Tanker Register reveals that on the average, for these types of lesser sized vessels, 1.4 pounds of fuel are consumed for each ton of water transferred. Unfortunately, the liquids involved are petroleum products, and not water. However, reports indicated that the viscosity effect will not likely exceed a ±15% variance in pumping capacity or power consumption comparing water to petroleum products, therefore, an average of 1.4 pounds per ton of liquid transferred was assumed (6). Presented in Table 3.8 is a detail of the assigned power usage according to the vessel type for cargo pumping.

TABLE 3.8

FUEL USAGE FOR CARGO PUMPING

Vessel Size KDWT	Fuel Consumption Lbs/Hr	Pump Capacity Tons H_2O/Hr	Pounds Fuel/Ton of H_2O/Hr
43	7,083	4,500	1.6
70	8,900	6,180	1.4
130	9,583	7,500	1.3
140	10,000	7,500	1.3
		Mean =	1.4

Lightering

Lighter operations present a unique series of vessel operations which do not readily fall into the categories presented in Table 3.7. A detailed

description of lightering operations and the operation of the VLCC (very large crude carrier) and the lighter are presented in Section 3.4.1. For the purpose of this study, it was assumed each vessel operated at an average power mix during lightering of 50% hotelling and 50% maneuvering. These estimates result in a power requirement during lightering of 32% for a steam powered vessel and 39% for a diesel powered vessel. These power factors were applied to each vessel the entire time each was in the lightering area. Power requirements for pumping were included as discussed in the previous section.

3.3.5 Emission Factors

There are two operations conducted by marine vessels which generate air pollution. Hydrocarbon emissions are generated as a result of displacement of vapors during the loading of petroleum products on a tanker (or fuel for non-tankers commonly called bunkering) or following an unloading when sea water (called ballast) is taken on by a tanker to lower the unloaded vessel in the water to insure adequate maneuverability.

Hydrocarbons, carbon monoxide, oxides of nitrogen, sulfur dioxide and particulate emissions are generated during the combustion of fuel by either a steam boiler or diesel engine. Emissions from this source are generated while the vessel is moving, secured at dockside (hotelling) or unloading cargo (pumping).

Organic Liquid Transfer Emission Factors

The emission factors for petroleum cargo transfers which were used in calculating the marine emissions inventory were selected after evaluation of available published factors and supporting data. Considerably more credence was given to factors supported by actual emission measurements than those determined by theoretical calculations.

All transfer emissions occur during loading operations and result from hydrocarbon vapors being displaced from the ship's tanks by the cargo being loaded. During discharge (off-loading) of cargo, ambient air is drawn into the tanks, and thus, no vapors are emitted to the atmosphere.

The emissions from petroleum and petroleum products loading are commonly broken down into arrival vapors and generated vapors. Arrival vapors are those vapors which are present in the tanks prior to the start of the loading operation. They are primarily a function of prior cargo and any tank cleaning procedures carried out subsequent to the previous off load of product. Generated vapors result from the vaporization of the cargo being loaded. Since the products are bottom-loaded, the generated vapors are usually confined to a narrow band (approximately 10 feet) above the liquid surface in the tank. These vapors are emitted in the latter stages of filling as the space above the liquid (ullage) approaches zero. The quantity of generated vapors emitted is dependent on final ullage as well as the physical properties (temperature, vapor pressure) of the product being loaded. If loading is interrupted, the movement of the product in the partially filled tank can cause the generated vapor layer to mix into the total tank air space. This results in higher emissions when loading is resumed.

Many of the variables which affect transfer emissions are recorded only during test programs. It is most practical to use average emissions for each cargo from a number of tests so as to average out the impact of variables for which data are normally not recorded. The factors used by Scott are based on the cargo loaded and on the prior cargo where this can be determined from Scott's ship activity records. The arrival vapors are a function of the prior cargo, and the generated vapors are a function of the loaded cargo. The total emissions are the sum of the arrival and generated vapors emitted as the interaction effects are negligible.

In this study, ballasting was treated as a water loading operation. Thus, the generated vapors are nil and the emissions are solely a function of the discharged cargo. Where ballasting is done into segregated tanks, the arrival emissions are also nil.

The emission factors applied to the various cargos transferred in the study area are shown in Table 3.9. The most comprehensive source of arrival factors is the data generated in the WOGA report on Hydrocarbon Emissions During Marine Loading of Crude Oils (7). While this study was centered on crude loading emissions for crudes produced in Ventura County, the ships involved in the tests had a wide range of prior cargo products. Additional arrival factor data for a variety of crudes were reported in the oil industry's 8-31 Committee report on ballasting emissions (6). Generated emission factors for gasoline and

TABLE 3.9

PETROLEUM TRANSFER EMISSION FACTORS
(Pounds of Hydrocarbon Per 1000 Gallons)

Product Code	Product Description	Arrival/Ballast Emissions	Generated Emissions	Reference
A	Asphalt Oil	0.3	0.01	7
B	Benzene	1.0	0.5	7
D	Distillate Oil	0.005	0.0	8
DF	Diesel Fuel	0.005	0.0	8
F	Residual Fuel Oil	0.3	0.01	7
FC	Crude/Fuel Oil Mix	0.6	0.2	7
G	Gasoline (Tanker)	1.8	0.7	6, 8
J	Jet Fuel - nonclassified	0.3	0.1	8
JP4	JP4 Jet Fuel	0.6	0.2	8
JP5	JP5 Jet Fuel	0.005	0.0	8
K	Kerosene	0.005	0.0	8
KEM	Chemicals	0.005	0.0	8
L	Lube Oil	0.005	0.0	8
LCH	Lubes/Chemicals Mix	0.005	0.0	8
N	Naphtha	0.3	0.1	7
NC	Non-classified Petroleum	0.65	0.1	7
P	Paraffin	0.3	0.01	7
S	Solvents	0.3	0.01	7
T	Transformer Oil	0.3	0.01	7
C	Crude - Non-classified	0.9	0.32	7
C01	Oriente	1.0	0.40	6, 7
C02	Katapa	2.9	1.00	6, 7
C03	Murban	0.8	0.25	6, 7
C04	Mubarek	1.0	0.40	6, 7
C05	Berri	1.0	0.40	6, 7
C06	Santa Maria	0.5	0.10	6, 7
C07	Ventura Blend	1.1	0.53	6, 7
C08	Santa Barbara	0.9	0.32	6, 7
C09	Montalvo/Ventura	0.3	0.02	6, 7
C10	Summerland	0.9	0.32	6, 7
C11	Pt. Conception	0.9	0.32	6, 7
BNK	Bunkering	0.1	0.0	Scott Data
BG	Barging of Gasoline	2.8	0.7	8

for crudes covering a wide volatility range are also available from the data in the above reports. The emission factors for gasoline, jet fuel and distillates given in AP-42 (8) are accepted by both government and industry.

The relevant arrival and generated emission factors from the various sources were tabulated along with the cargo RVP, where known, and density. Since there is a strong relationship between RVP and emission factors, the reasonableness of the various factors could be judged.

Values for products not included in the studies were estimated from data on known products with similar physical properties. The relatively high arrival factors for such non-volatile products as low sulfur fuel oil seemed anomalous until it was recognized that many non-volatile products and crude oils must be heated to improve their flow characteristics. Heating the products produces hydrocarbon vapor concentrations equivalent to approximately 0.3 pounds per thousand gallons. The factors for low volatility products such as kerosene, distillate and JP-5 which are published in AP-42, are 0.005 pounds per thousand gallons. These products do not require heating for transfer and the factors are widely accepted. No measured data were found which could support the three orders of magnitude difference between factors for heated and unheated non-volatile product transfers. The fraction of the total marine hydrocarbon emissions resulting from the transfer of non-volatiles is small. Thus, uncertainty of the factor has little impact on the overall accuracy of the calculated hydrocarbon emissions.

The cargo transfer emission and ballasting factors for the major cargos in terms of both quantity and magnitude of emissions are clearly supported by hydrocarbon data from reliable measurements taken during actual loading operations. The application of these factors to transfer operations will result in an accurate picture of the magnitude of emissions from this activity.

Hydrocarbons can be divided into several classes as a function of the rates at which they participate in atmospheric photochemical reactions and the amounts of undesirable products which they produce. The California Air Resources Board uses a three class scheme for reactivity classification as shown in Table 3.10. Classes I, II and III are used to designate individual hydrocarbons with low, moderate and high reactivity.

TABLE 3.10

AIR RESOURCES BOARD

REACTIVITY CLASSIFICATION OF ORGANIC COMPOUNDS

Class I (Low Reactivity)	Class II (Moderate Reactivity)	Class III (High Reactivity)
C_1-C_2 Paraffins	Mono-tert-alkyl-benzenes	All other aromatic hydrocarbons
Acetylene	Cyclic ketones	All olefinic hydrocarbons (including partially halogenated)
Benzene	Alkyl acetates	Aliphatic aldehydes
Benzaldehyde	2-nitropropane	Branched alkyl ketones
Acetone	C_3+ paraffinds	Cellosolve acetate
Methanol	Cycloparaffins	Unsaturated ketones
Tert-alkyl alcohols	N-alkyl ketones	Primary and Secondary C_2+ alcohols
Phenyl acetate	N-methyl pyrrolidone	Diacetone alcohol
Methyl benzoate	N,N-dimethyl acetamide	Ethers
Ethyl amines	Alkyl phenols*	Cellosolves
Dimethyl formamide	Methyl phthalates**	Glycols*
Perhalogenated Hydrocarbons		C_2+ alkyl phthalates**
Partially halogenated hydrocarbons		Other esters**
Phthalic anhydride**		Alcohol amines**
Phthalic acids**		C_3+ organic acids + di acid**
Acetonitrile*		C_3+ di acid anhydrides**
Acetic acid		Formin** (Hexa methylene-tetramine)
Aromatic amines		Terpenic hydrocarbons
Hydroxyl amines		Olefin oxides**
Napthalene*		
Chlorobenzenes*		
Nitrobenzenes*		
Phenol*		

* Reactivity data are either non-existent or inconclusive, but conclusive data from similar compounds are available; therefore, rating is uncertain but reasonable.

** Reactivity data are uncertain.

Of the hydrocarbons present in marine petroleum transfer and engine emissions, methane, ethane and benzene are the primary components of Class I. Propane and higher paraffins fall into Class II, while Class III is represented by all olefins and most other aromatics.

Under contract to ARB, KVB recently developed an extensive series of reactivity breakdowns for hydrocarbon emissions from a variety of sources. Some of these apply to marine emissions. In developing reactivity factors for the marine emission inventory program, Scott checked the applicable factors against individual hydrocarbon data on marine emissions published in various reports and on Scott analyses of emissions samples. The most extensive hydrocarbon data resulted from the WOGA study(7) of marine loading of crude off the coast of Ventura County and the 831 Committee report (6) on ballasting and other marine emissions.

The hydrocarbon reactivity breakdown for each category of product transferred and engine emissions is shown in Table 3.11. The factors for all major product categories, both in terms of quantity transferred and total hydrocarbon emissions, are based on sufficient supportive data to insure a high degree of accuracy. For some minor products, little or no data existed, so Scott selected factors based on similar products.

Hydrocarbon emissions from the loading of crude and from ballasting following crude unloading represent a large portion of the total marine hydrocarbon emissions. No Class III hydrocarbons are emitted from crude transfer operations. The reactivity then depends on the amount of C_1 and C_2 paraffins (Class I) present. While 831 Committee data showed that this could vary from 2 to 70%, most crudes tested emitted from 10 to 20% Class I. The KVB value of 14% Class I is quite close to the average of 13% reported for the WOGA program. The KVB distribution of 14-86-0 was thus selected for crude emissions.

Gasoline loading is another major source of marine hydrocarbon emissions. The Class I hydrocarbons are very low and the major variable is the breakdown between Class II and Class III. The fraction of Class III hydrocarbons varies from case to case depending primarily on the light olefin content (butenes and pentenes) of the gasoline. The 13% Class III allotted by KVB is believed reasonable for gasoline produced in California in 1976.

TABLE 3.11 - PETROLEUM TRANSFER EMISSION FACTORS
(Pounds of Hydrocarbons Per 1000 Gallons)

Product Code	Product Description	Arrival/Ballast Emissions	General Emissions	Mole % In Reactivity Class 1	2	3
A	Asphalt Oil	0.3	0.01	13	86	0
B	Benzene	1.0	0.5	100	0	0
D	Distillate Oil	0.005	0.0	10	90	0
DF	Diesel Fuel	0.005	0.0	0	100	0
F	Residual Fuel Oil	0.3	0.01	14	86	0
FC	Crude/Fuel Oil Mix	0.6	0.2	14	86	0
G	Gasoline	1.8	0.7	1	86	13
J	Jet Fuel - Non-classified	0.3	0.1	0	100	0
JP4	JP4 Jet Fuel	0.6	0.2	0	100	0
JP5	JP5 Jet Fuel	0.005	0.0	0	100	0
K	Kerosene	0.005	0.0	0	100	0
KEM	Chemicals	0.005	0.0	0	100	0
L	Lube Oil	0.005	0.0	0	100	0
LCH	Lubes/Chemicals Mix	0.005	0.0	0	100	0
N	Naptha	0.3	0.1	0	100	0
NC	Non-classified Petroleum	0.65	0.1	13	86	1
P	Paraffin	0.3	0.01	0	100	0
S	Solvents	0.3	0.01	10	40	50
T	Transformer Oil	0.3	0.01	13	86	1
C	Crude - Non-classified	0.9	0.32	14	86	0
C01	Oriente	1.0	0.40	14	86	0
C02	Katapa	2.9	1.00	14	86	0
C03	Murban	0.8	0.25	14	86	0
C04	Mubarek	1.0	0.40	14	86	0
C05	Berri	1.0	0.40	14	86	0
C06	Santa Maria	0.5	0.10	14	86	0
C07	Ventura Blend	1.1	0.53	14	86	0
C08	Santa Barbara	0.9	0.32	14	86	0
C09	Montalvo/Ventura	0.3	0.02	14	86	0
C10	Summerland	0.9	0.32	14	86	0
C11	Pt. Conception	0.9	0.32	14	86	0
Diesel Engine Exhaust				13	24	63
Steam Engine Exhaust				37	19	42

The emissions from heavier fuels such as JP4, JP5, kerosene and distillate are composed almost entirely of C_3 to C_{10} paraffins. The assigned reactivities which allot 90 to 100% to Class II are satisfactory. Residual fuel oil is heated in transfer and its emissions closely resemble those from crude. The remaining products contribute very little to overall emissions, and the reactivity values assigned are based on best engineering judgment. The only major contributors to Class III (high reactivity) are those solvents which contain C_6 to C_{10} aromatics. Since solvents are not classified in port records as to type, a rather arbitrary breakdown was assigned. Any error would have a small effect on overall emissions because of the extremely small amount of solvent handled.

Engine emissions are rather complex in that they include cracked hydrocarbons and oxygenated hydrocarbons as well as fuel components. The breakdowns used by KVB for diesel engines and steam boilers are based on analyses for only a handful of the hundreds of individual hydrocarbons present in exhaust. The reactivity breakdown for diesel engine emissions derived by Radian (9) in a 1977 study is believed more realistic. As with minor product transfers, the total hydrocarbon contribution from ship engine emissions is sufficiently small so that any inaccuracies in reactivity factors will not lead to serious errors in the overall classification of marine emissions.

Combustion Engine Factors

Vessels operating in various modes in addition to consuming varying quantities of fuel also produce varying levels of pollutants. Combustion emission factors were divided between motor vessels (diesels) and steam ships.

Emission factors for motor vessels were assumed to be the same for all modes of operation except when the vessel was docked. Emission factors for hotelling and cargo offloading for motor vessels was assumed to be the same as steamships since most diesel powered vessels use auxiliary boilers for these operations. Combustion emission factors for steam ships were classified to the following operating modes:

- Cruise and Transit
- Maneuvering
- Hotelling (same for motor vessels)
- Tanker Offloading (same for motor vessels)

Emission factors used for steam vessel operations in each of these four modes are presented in Table 3.12. In general, the factors selected are based upon AP-42.

Emission tests conducted by Scott and other ARB research contractors indicates that the factors selected are reasonable (10). Modification to several factors was made based upon tests conducted by Scott and information published (3, 4, 5). These modifications included increasing the NO_x emission factor for the pumping mode, decreasing the hydrocarbon emission factor for the cruise and pumping modes, and selecting a carbon monoxide emission factor for the hotelling mode. These modifications were minor and overall the factors used are in agreement with AP-42.

In reviewing marine diesel emission factors, it was discovered that limited information was available and generally related to smaller/high speed diesels as compared to large/slow speed diesels found in cargo, tanker and passenger vessels. Contact with the M.A.N. Corporation, a large West German manufacturer of marine diesel engines, resulted in test data being supplied on several engines at 60% and 85% power (Appendix A). This data was felt to be the best available and, as such, used to calculate diesel emission factors. These factors are presented in Table 3.12. These factors are very comparable to factors published in AP-42 for smaller marine diesel engines.

3.3.6 Data Processing

All data processing in this program was performed using Scott's in-house Univac 90/30 System. The relevant information contained in the various source documents was keypunched in a specified format and entered into one of several computer files. The largest file was the Ship Activity file which contained all information pertaining to the movements and product transfers of all major commercial ships which entered the study area during 1976. All information was tied to the ship name as the key. Where more than one ship had the same name, a suffix was added to the name to segregate the information relevant to that ship.

TABLE 3.12 - COMBUSTION EMISSION FACTORS, LBS/1000 GALLONS FUEL CONSUMED

TYPE OF SHIP	NOX	HC	CO	SO_2	PARTICULATE
DIESELS					
2 and 4 cycles, all modes, except:	300	24	61	157S[1]	33
Hotelling	36	4	12	157S	10S+3
Tanker Offloading	85	0.1	7	157S	10S+3
STEAMSHIPS					
Cruise and Transit	64	0.1	7	157S	10S+3
Maneuvering	56	1	3	157S	10S+3
Hotelling	36	4	12	157S	10S+3
Tanker Offloading	85	0.1	7	157S	10S+3

[1] Percent sulfur in fuel burned. For the study period an average sulfur content of 2% was assumed. (Ref. 11).

Scott Environmental Technology Inc.

The location/date/time data from the Los Angeles and San Francisco Marine Exchanges and from other ports was used to develop a chronological berth activity log for each ship. Considerable editing was required at this and other stages of the data processing to correct for misspelled names, wrong dates, etc. The petroleum product transfer data obtained from oil companies and port logs was next matched with the corresponding berth period by use of a computer program designed to match berth locations and time periods.

Another file contained engineering data on each ship. This file contained data such as engine type, fuel consumption, segregated ballast, overall ship capacity, speed, etc. This file was primarily used for engine emission and ballast emission calculations. However, it initially was used to determine the transit time for each ship in the sea lanes.

The time intervals for ship movements from location to location were added to the Ship Activity file's berth/time records. Each trip in and out of a major port required at least five activity reports to account for differences in engine operating conditions in the different segments of the trip. The five segments included sea lane in, transition from sea lane to gate, gate to berth, at berth, berth to gate, transition to sea lane and sea lane. If a ship went to anchor or more than one berth, additional transit segments were added. Most of these transit records were computed and added by the computer based on input of fixed time or distance - speed relationships.

The final file required for the emissions calculations was the emission factor file. This file contained engine emission factors for each engine type and load conditions, as well as product transfer emission factors for arrival, generated and ballast vapors for each product transferred. The hydrocarbon emission factors were split into the three reactivity classes for all products and engine emissions.

The tanker records in the activity file were addressed by computer program to determine the prior product in each tank that was loaded with product. This was essential because the arrival emissions due to prior product usually exceeded the generated emissions of hydrocarbons due to the product being loaded. Another computer program was used to determine when a ship ballasted after offloading and the extent of which it ballasted.

At this point the emissions related to individual ship engines and product transfers were calculated for each trip segment. The engine emissions were the product of the fuel consumption rate, engine operating mode, emission

factor and time in each segment. The transfer emissions for onloading were the product of the quantity of each product transferred and the corresponding emission factors.

Emissions from tugs, bunkering, military operations and other miscellaneous marine activities covered were added as monthly or yearly totals based on the detail of available source data. These emissions were spread evenly over the total time period they covered.

The emissions file now contained nearly 100,000 entries, each indicating the type of activity, location, time period and quantity of each of the five pollutants along with the three class hydrocarbon reactivity breakdown. The 100,000 entires were sorted and subtotaled by port location, activity and month to produce the various emission data presentations associated with this report.

While the 100,000 entries cited above relate to emissions from specific individual ships, the names of ships were not included so that the confidentiality of the product transfer information could be maintained as requested by most companies which furnished it to Scott. The omission of the ship names in no way diminished the value of the emission data in as much as location, time and activity type designations are associated with each of the records.

3.4 INVENTORY RESULTS

Emissions attributable to the operation of power plants on board ships and to the transfer of petroleum products in California Coastal Waters are summarized in the following sections. Section 3.4.1 presents selected emission summaries and breakdowns by ports, source and activities. A discussion of hydrocarbon emissions by species is presented in Section 3.4.2, a discussion of spatial distribution of these emissions is contained in Section 3.4.3, and temporal emissions are addressed in Section 3.4.4.

Due to the complexity of and problems encountered with in transit hydrocarbon losses, these emissions were treated as a separate category and, as such, are discussed in Section 3.4.5. In transit hydrocarbon emissions occur as a result of diurnal temperature changes of liquid and vapor contained in a tank. These changes in temperature are due to both changes of water temperature and changes in air temperature. Emission summaries except as noted do not include hydrocarbon emissions associated with diurnal breathing of the vapor space in tanker cargo tanks.

3.4.1 Emission Summaries

Table 3.13 presents a summary of emissions from marine operations within the California Coastal Waters. Further breakdowns of these emissions are found in subsequent sections, appendices and the addendum to this report.

Tables 3.13a through 3.13f present supporting data regarding the makeup of the total emission summary presented in Table 3.13.

Table	Source	Activity Source Code
3.13a	Engine	A-E, B-E, H-E, L-E, P-E, S-E, T-E, M-T, M-M
3.13b	Product Transfer	P-E, P-P, P-V
3.13c	Ballasting	B-E, B-P, B-V
3.13d	Bunkering	F-P, F-V
3.13e	Lightering	L-E, L-P
3.13f	Small Craft	M-S

Tables 3.14 and 3.15 present, respectively, port and activity, source and location codes. These codes are referenced in the summaries presented in subsequent sections.

Table 3.16 presents a summary of the total emissions by port associated with marine operations within California Coastal Waters during calendar year 1976. The port summaries shown in Table 3.16 are further divided by activity (Table 3.16a). As previously stated, emissions associated with breathing losses are not included in Tables 3.16 and 3.16a. Emissions presented in Table 3.16 include pounds emitted of total hydrocarbons (THC), carbon monoxide (CO), oxides of nitrogen (NO_x), Oxides of sulfur (SO_2), particulates (Part.) and a distribution of total hydrocarbons by reactivity class.

Table 3.17 presents a summary of emissions by activity/source. Each activity/source is further broken down by ports with the study area.

3.4.2 Hydrocarbon Emissions By Reactivity Class

The hydrocarbons emitted in marine operations were divided into Class I (low reactivity), Class II (moderate reactivity) and Class III (high reactivity). The total hydrocarbon emissions of 13.1 million pounds were comprised of 12% of Class I, 77% of Class II, and 11% of Class III reactivity.

TABLE 3.13 - SUMMARY OF EMISSION
INVENTORY BY SOURCE
(See Tables 3.13a-f for details)

Source	lbs. THC	lbs. CO	lbs. NO_x	lbs. SO_x	lbs. Particulate	Reactive Hydrocarbons, lbs. Class 1	Class 2	Class 3
Engine	1,339,983	4,257,018	20,904,657	52,539,686	4,387,455	212,975	311,242	810,931
Prod. Trans.	1,041,032	33,840	410,847	1,517,727	111,166	854,590	6,924,390	261,755
Ballasting	2,808,060	42,315	513,769	1,897,937	139,011	361,932	2,418,287	27,539
Bunkering	257,333	2,868	34,861	128,778	9,431	36,052	221,292	13
Small Craft	69,306	182,573	852,236	847,232	95,923	9,010	16,634	43,663
In-Transit	2,629,330	0	0	0	0	26,293	2,497,864	105,173
Military	577,834	1,550,051	7,624,891	1,037,391	797,195	75,117	138,677	364,028
Total Lbs.	15,722,876	6,068,688	30,341,688	57,969,333	5,540,224	1,575,970	12,528,388	1,613,107
Total Tons	7,861.4	3,034.3	15,170.7	28,984.7	2,770.1	788.0	6,264.2	806.6

TABLE 3.13a ENGINE EMISSION SUMMARY

	Source	lbs. THC	lbs. CO	lbs. NO_x	lbs. SO_x	lbs. Particulate	Reactive Hydrocarbons, lbs. Class 1	Class 2	Class 3
A-E	A/S Totals	158,047	474,133	1,422,280	12,405,269	908,672	42,034	33,493	82,610
B-E	A/S Totals	21,939	65,800	197,291	1,720,763	126,027	6,773	4,514	10,684
H-E	A/S Totals	105,443	270,456	1,525,562	2,824,080	249,167	14,716	23,511	64,509
L-E	A/S Totals	3,506	10,405	185,259	1,024,120	75,122	1,299	679	1,529
P-E	A/S Totals	49,386	148,106	444,267	3,874,728	283,840	16,801	9,896	22,844
S-E	A/S Totals	811,239	2,419,481	13,459,394	27,121,518	2,322,519	105,335	193,599	508,991
T-E	A/S Totals	93,549	282,482	1,576,139	3,234,152	275,914	13,298	22,328	58,842
M-T	A/S Totals	96,377	584,664	2,066,630	178,984	134,760	12,528	23,130	60,719
L-P	A/S Totals	497	1,491	27,835	156,072	11,434	191	92	203
	TOTAL POUNDS	1,339,983	4,257,018	20,904,657	52,539,686	4,387,455	212,975	311,242	810,931
	TOTAL TONS	670.0	2,128.5	10,452.3	26,269.8	2,193.7	106.5	155.6	405.5

TABLE 3.13b PRODUCT TRANSFERS EMISSION SUMMARY

		lbs. THC	lbs. CO	lbs. NO_x	lbs. SO_x	lbs. Particulate	lbs. Class 1	Reactive Class 2	Hydrocarbons Class 3
P-P	A/S Totals	358	33,840	410,847	1,517,727	111,166	2		2
P-V	A/S Totals	8,040,674					854,588	6,924,390	261,753
	TOTAL POUNDS	8,041,032	33,840	410,847	1,517,727	111,166	854,590	6,924,390	261,755
	TOTAL TONS	4,020.5	16.9	205.4	758.9	55.6	427.3	3,462.2	130.9

TABLE 3.13c - BALLASTING EMISSION SUMMARY

		lbs. THC	lbs. CO	lbs. NO_x	lbs. SO_x	lbs. Particulate	lbs. Class 1	Reactive Class 2	Hydrocarbons Class 3
B-P	A/S Totals	471	42,315	513,769	1,897,927	139,011	73	4	73
B-V	A/S Totals	2,807,589					361,859	2,418,283	27,466
	TOTAL POUNDS	2,808,060	42,315	513,769	1,897,927	139,011	361,932	2,418,287	27,539
	TOTAL TONS	1,404.0	21.2	256.9	949.0	69.5	181.0	1,209.1	13.8

TABLE 3.13d BUNKERING EMISSION SUMMARY

		lbs. THC	lbs. CO	lbs. NO_x	lbs. SO_x	lbs. Particulate	lbs. Class 1	Reactive Class 2	Hydrocarbons Class 3
F-P	A/S Totals	38	2,868	34,861	128,778	9,431	13	10	13
F-V	A/S Totals	257,295					36,039	221,282	
	TOTAL POUNDS	257,333	2,868	34,861	128,778	9,431	36,052	221,292	13
	TOTAL TONS	128.7	1.4	17.4	64.4	4.7	18.0	110.6	

TABLE 3.13e LIGHTERING EMISSION SUMMARY

		lbs. THC	lbs. CO	lbs. NO_x	lbs. SO_x	lbs. Particulate	lbs. Class 1	Reactive Class 2	Hydrocarbons Class 3
L-P	A/S Totals	497	1,491	27,835	156,072	11,434	191	92	203
	TOTAL POUNDS	497	1,491	27,835	156,072	11,434	191	92	203
	TOTAL TONS	0.248	0.745	14.0	78.4	5.7	0.095	0.046	0.101

#2581-01-0681

TABLE 3.13f SMALL CRAFT EMISSION SUMMARY

		lbs. THC	lbs. CO	lbs. NO_x	lbs. SO_x	lbs. Particulate	lbs. Class 1	Reactive Class 2	Hydrocarbons Class 3
M-S	A/S Totals	69,306	182,573	852,236	847,232	95,923	9,010	16,634	43,663
	TOTAL POUNDS	69,306	182,573	852,236	847,232	95,923	9,010	16,634	43,663
	TOTAL TONS	34.7	91.3	426.1	423.6	48.0	4.5	8.3	21.8

TABLE 3.14

PORT CODES

ALC	-	Alcatraz	NCW	-	Northern Coastal Waters
ALM	-	Alameda	NYP	-	New York Point
ANT	-	Antioch	OAK	-	Oakland
AVN	-	Avon	OLM	-	Oleum
BAY	-	San Francisco Bay	OZL	-	Oxola
BEN	-	Benicia	PCH	-	Point Chicago
BSY	-	Bethlehem Steel	PH	-	Point Hueneme
COP	-	Coal Oil Point	PIT	-	Pittsburg
CRK	-	Crockett	PSL	-	Point San Luis
CRP	-	Carpinteria	RC	-	Redwood City
EB	-	Estero Bay	RCH	-	Richmond
ENC	-	Encina	SAC	-	Sacramento
ES	-	El Segundo	SCL	-	Southern Coastal Lightering
GV	-	Gaviotta			
HB	-	Huntington Beach	SCW	-	Southern Coastal Waters
LA	-	Los Angeles	SD	-	San Diego
LB	-	Long Beach	SEQ	-	Sequoia
MB	-	Morro Bay	SF	-	San Francisco
MGS	-	Mandalay Beach	STK	-	Stockton
ML	-	Moss Landing	VEN	-	Ventura
MTZ	-	Martinez			

TABLE 3.15

ACTIVITY/SOURCE/LOCATION
CODES

Activity Codes (A)

A - Hotelling (at berth or anchor)
B - Ballasting
F - Bunkering
H - Harbor Transit
L - Lightering
M - Miscellaneous
P - Product Transfer
S - Sea Lane Transit
T - Harbor to Sea Lane Transit

Source Codes (S)

E - Engines (ship)
M - Military
P - Pumps (ship)
S - Small Craft (ferries, etc.)
T - Tugs
V - Vapors (displaced from ship tanks)

Location Codes

A - Harbor Area
B - Berth
L - Sea Lane

TABLE 3.16

EMISSION INVENTORY SUMMARY BY PORT

Port	lbs. THC	lbs. CO	lbs. NO_x	lbs. SO_x	lbs. Particulate	lbs. Class 1	Reactive Class 2	Hydrocarbons Class 3
Alameda	1,975	5,918	17,759	154,914	11,344	445	428	1,115
Antiock	122	361	1,082	9,427	689	37	24	65
Avon	382,227	4,585	27,604	148,126	10,846	19,752	328,173	34,302
San Franc.Bay	795,134	736,608	3,337,719	3,904,401	469,204	109,213	537,786	146,231
Benicia	853,949	14,075	78,541	442,419	32,401	52,561	737,447	63,940
Bethlehem Ste.	149	447	1,342	11,703	857	58	28	63
Coal Oil Pt.	44,389	642	1,898	14,547	1,097	5,097	38,037	1,255
Crocket	486	1,461	4,394	38,302	2,806	165	102	225
Carpinteria	55,037	1,450	5,285	34,275	2,592	7,232	47,049	766
Estero Bay	701,876	11,934	36,307	182,616	14,332	97,075	601,632	3,166
Encina	9,786	3,774	27,878	132,665	9,723	1,531	7,944	280
El Segundo	1,003,819	34,941	201,681	1,113,260	81,544	105,738	863,594	34,458
Gaviotta	3,847	32	93	538	44	509	3,303	36
Huntingron Be	29,181	3,504	23,944	119,147	8,725	4,146	24,641	370
Los Angeles	1,772,598	281,428	1,298,725	5,749,340	446,054	191,374	1,475,206	105,369
Long Beach	1,037,091	367,444	1,684,982	5,649,209	484,328	126,114	811,157	99,519
Morro Bay	14,749	2,410	13,922	58,252	4,395	2,144	12,406	202
Mandolay Bea.	861	635	4,561	22,026	1,615	149	657	50
Moss Landing	22,417	4,493	26,756	110,287	8,330	3,276	18,772	366

TABLE 3.16

EMISSION INVENTORY SUMMARY BY PORT

(cont'd.)

	lbs. THC	lbs. CO	lbs. NO_x	lbs. SO_x	lbs. Particulate	lbs. Class 1	Reactive Class 2	Hydrocarbons Class 3
Martinez	884,750	23,666	121,336	721,837	52,871	76,744	762,715	45,248
Northern Coastal Waters	485,088	1,623,267	8,498,604	15,617,944	1,409,045	63,706	115,730	304,581
New York Point	4	11	33	287	21	2	1	2
Oakland	21,643	64,851	194,531	1,696,808	124,293	6,902	4,400	10,395
Oleum	393,890	10,383	49,921	309,965	22,715	42,654	339,144	12,093
Oxola	2,096	309	1,639	9,558	699	30	2,032	34
Pt. Chicago	3,273	9,819	29,454	256,902	18,820	1,176	643	1,453
Pt. Hueneme	16,712	3,004	23,014	107,282	7,863	2,448	14,024	227
Pittsburg	22,792	4,468	26,963	144,680	10,597	3,342	18,949	515
Pt. San Luis	150,502	4,504	17,851	80,708	6,246	20,340	128,788	1,389
Redwood City	970	477	1,975	13,560	993	51	857	63
Richmond	1,541,109	60,386	291,441	1,805,229	132,229	212,502	1,291,064	37,428
Sacramento	2,630	7,879	23,627	206,093	15,098	494	599	1,543
Southern Coastal Light.	1,368,075	11,896	213,094	1,180,192	86,556	192,085	1,173,875	2,112
Southern Coastal Waters	665,456	2,000,327	10,334,667	15,175,923	1,533,437	86,875	159,177	418,079
San Diego	274,189	693,518	3,482,785	797,781	384,892	36,222	69,165	168,790
Sequoia	154,428	5,078	27,189	157,357	11,523	20,419	124,249	744
San Francisco	23,131	61,331	184,893	1,606,958	117,705	6,962	6,465	9,685
Stockton	5,215	5,320	17,822	142,966	10,476	578	3,658	980

TABLE 3.16

EMISSION INVENTORY SUMMARY BY PORT
(cont'd.)

	lbs. THC	lbs. CO	lbs. NO_x	lbs. SO_x	lbs. Particulate	lbs. Class 1	Reactive Class 2	Hydrocarbons Class 3
Ventura	356,900	2,052	6,017	41,849	3,219	49,529	306,603	795
TOTALS	13,093,546	6,068,688	30,341,329	57,969,333	5,540,224	1,549,677	10,030,524	1,507,934

TABLE 3.16a

SCOTT ENVIRONMENTAL TECHNOLOGY INC.

CARB MARINE EMISSIONS INVENTORY
DATA EDIT LISTING

1976 EMISSIONS SUMMARY BY SOURCE BY PORT - CALIFORNIA COASTAL WATERS

DATE 08/28/80
PAGE 0001

PORT	A/S CODE	LOCATION	POUNDS POLLUTANTS THC	CO	NOX	SOX	PART	POUNDS REACTIVE CLASS 1	CLASS 2	CLASS 3
ALC	A-E	B	0	0	0	0	0	0	0	0
ALC	PORT TOTALS		0	0	0	0	0	0	0	0
ALM	A-E	B	1,975	5,918	17,759	154,914	11,344	445	428	1,115
ALM	D-E	B	0	0	0	0	0	0	0	0
ALM	PORT TOTALS		1,975	5,918	17,759	154,914	11,344	445	428	1,115
ANT	A-E	B	122	361	1,082	9,427	689	37	24	65
ANT	PORT TOTALS		122	361	1,082	9,427	689	37	24	65
AVN	A-E	B	12	38	113	987	72	5	2	5
AVN	B-E	B	642	1,921	5,745	50,140	3,669	252	122	272
AVN	B-P	B	11	1,067	12,904	47,667	3,491	0	0	0
AVN	B-V	B	72,763	0	0	0	0	10,180	62,577	7
AVN	F-P	A	2	259	3,150	11,636	852	0	0	0
AVN	F-V	B	5,918	0	0	0	0	829	5,090	0
AVN	P-E	B	368	1,106	3,315	28,914	2,118	123	73	174
AVN	P-P	B	1	194	2,377	6,782	644	0	0	0
AVN	P-V	B	302,510	0	0	0	0	8,363	260,309	33,844
AVN	PORT TOTALS		382,227	4,585	27,604	148,126	10,846	19,752	328,173	34,302
BAY	A-E	B	10,132	30,487	91,200	795,337	58,258	2,883	2,055	5,141
BAY	A-P	B	8	23	68	592	43	1	2	5
BAY	B-E	B	405	1,214	3,643	31,766	2,326	115	84	206
BAY	B-P	B	0	138	1,684	6,224	455	0	0	0
BAY	B-V	B	14,498	0	0	0	0	2,030	12,468	0
BAY	H-E	L	52,659	135,299	783,402	1,559,636	135,072	7,111	11,846	31,850
BAY	M-M	L	75,751	192,534	978,453	79,286	104,158	9,848	18,180	47,723
BAY	M-S	L	63,775	162,095	797,190	834,392	87,691	8,291	15,306	40,178
BAY	M-T	L	27,738	196,035	607,048	65,965	42,285	3,606	6,657	17,475
BAY	P-E	B	5,618	16,846	50,531	440,730	32,289	1,565	1,198	2,878
BAY	P-P	B	24	2,017	24,500	90,503	6,627	0	0	0
BAY	P-V	B	544,526	0	0	0	0	73,763	469,990	775
BAY	PORT TOTALS		795,134	736,608	3,337,719	3,904,401	469,204	109,213	537,786	146,231
BEN	A-E	B	821	2,472	7,412	64,655	4,737	132	168	517
BEN	B-E	B	1,689	5,072	15,207	132,631	9,711	602	333	757
BEN	B-P	B	28	3,249	39,435	145,678	10,669	0	0	0
BEN	B-V	B	271,342	0	0	0	0	37,786	233,556	0
BEN	P-E	B	850	2,559	7,670	66,888	4,900	296	168	389
BEN	P-P	B	7	723	8,817	32,567	2,384	0	0	0
BEN	P-V	B	579,212	0	0	0	0	13,743	503,202	62,277

#2581-01-0681

TABLE 3.16a (continued)

S C O T T E N V I R O N M E N T A L T E C H N O L O G Y I N C.

CARB MARINE EMISSIONS INVENTORY
DATA EDIT LISTING — 1976 EMISSIONS SUMMARY BY SOURCE BY PORT - CALIFORNIA COASTAL WATERS — DATE 08/28/80 PAGE 0002

PORT	A/S CODE	LOCATION	POUNDS POLLUTANTS THC	CO	NOX	SOX	PART	POUNDS REACTIVE CLASS 1	CLASS 2	CLASS 3
BEN	PORT TOTALS		853,949	14,075	78,541	442,419	32,401	52,561	737,447	63,940
BSY	A-E	B	149	447	1,342	11,703	857	58	28	63
BSY	PORT TOTALS		149	447	1,342	11,703	857	58	28	63
COP	M-T	L	24	87	234	55	35	3	6	15
COP	P-E	B	184	555	1,664	14,492	1,062	71	35	77
COP	P-V	B	44,181	0	0	0	0	5,023	37,996	1,163
COP	PORT TOTALS		44,389	642	1,898	14,547	1,097	5,097	38,037	1,255
CRK	A-E	B	486	1,461	4,394	38,302	2,806	165	102	225
CRK	PORT TOTALS		486	1,461	4,394	38,302	2,806	165	102	225
CRP	B-E	B	36	109	329	2,862	210	14	7	15
CRP	B-P	B	0	35	426	1,571	115	0	0	0
CRP	B-V	B	4,356	0	0	0	0	44	3,748	568
CRP	M-T	L	60	224	602	140	90	8	14	38
CRP	P-E	B	338	1,007	3,026	26,364	1,932	133	66	145
CRP	P-P	B	0	75	902	3,338	245	0	0	0
CRP	P-V	B	50,247	0	0	0	0	7,033	43,214	0
CRP	PORT TOTALS		55,037	1,450	5,285	34,275	2,592	7,232	47,049	766
EB	A-E	B	135	404	1,212	10,559	774	49	26	58
EB	M-T	L	710	5,020	15,547	1,689	1,083	92	170	447
EB	P-E	B	2,169	6,508	19,525	170,283	12,469	850	410	908
EB	P-P	B	0	2	23	85	6	0	0	0
EB	P-V	B	698,862	0	0	0	0	96,084	601,026	1,753
EB	PORT TOTALS		701,876	11,934	36,307	182,616	14,332	97,075	601,632	3,166
ENC	B-E	B	205	609	1,824	15,918	1,168	80	38	86
ENC	B-P	B	11	789	9,593	35,438	2,595	0	0	0
ENC	B-V	B	9,097	0	0	0	0	1,276	7,821	0
ENC	P-E	B	453	1,357	4,076	35,554	2,609	175	85	194
ENC	P-P	B	20	1,019	12,385	45,755	3,351	0	0	0
ENC	PORT TOTALS		9,786	3,774	27,878	132,665	9,723	1,531	7,944	280
ES	B-E	B	2,087	6,261	18,775	163,765	11,991	429	471	1,186
ES	B-P	B	77	5,635	68,438	252,809	18,516	36	0	36
ES	B-V	B	261,548	0	0	0	0	35,853	224,935	762
ES	H-E	L	0	29	385	2,162	160	0	0	0

#2581-01-0681

TABLE 3.16a (continued)

S C O T T E N V I R O N M E N T A L T E C H N O L O G Y I N C.

CARB MARINE EMISSIONS INVENTORY
DATA EDIT LISTING — 1976 EMISSIONS SUMMARY BY SOURCE BY PORT - CALIFORNIA COASTAL WATERS

DATE 08/28/80
PAGE 0003

PORT	A/S CODE	LOCATION	POUNDS POLLUTANTS THC	CO	NOX	SOX	PART	POUNDS REACTIVE HC CLASS 1	CLASS 2	CLASS 3
ES	P-E	B	6,029	18,094	54,315	473,727	34,705	1,800	1,254	2,993
ES	P-P	B	52	4,922	59,768	220,797	16,172	1	0	1
ES	P-V	B	734,026	0	0	0	0	67,619	636,934	29,480
ES	PORT TOTALS		1,003,819	34,941	201,681	1,113,260	81,544	105,738	863,594	34,456
GV	M-T	L	3	12	33	8	5	0	1	2
GV	P-E	B	6	20	60	530	39	3	1	3
GV	P-V	B	3,838	0	0	0	0	506	3,301	31
GV	PORT TOTALS		3,847	32	93	538	44	509	3,303	36
HB	B-E	B	259	779	2,337	20,382	1,490	74	55	130
HB	B-P	B	10	583	7,072	26,133	1,915	0	0	0
HB	B-V	B	28,480	0	0	0	0	3,990	24,491	0
HB	P-E	B	420	1,256	3,766	32,846	2,406	82	95	240
HB	P-P	B	12	886	10,769	39,786	2,914	0	0	0
HB	PORT TOTALS		29,181	3,504	23,944	119,147	8,725	4,146	24,641	370
LA	A-E	B	40,823	122,486	367,408	3,204,619	234,722	9,846	8,814	22,154
LA	B-E	B	4,860	14,571	43,702	381,119	27,911	1,467	1,005	2,387
LA	B-P	B	95	7,490	90,960	336,009	24,604	16	0	16
LA	B-V	B	546,735	0	0	0	0	66,305	471,942	8,491
LA	F-P	A	35	2,348	28,528	105,385	7,718	13	10	13
LA	F-V	B	160,790	0	0	0	0	22,513	138,287	0
LA	H-E	L	28,725	73,464	397,215	644,963	58,902	4,070	6,291	17,784
LA	M-S	L	720	2,665	7,163	1,671	1,071	94	173	454
LA	M-T	L	12,198	22,753	197,051	20,841	13,862	1,586	2,928	7,685
LA	P-E	B	9,709	29,115	87,317	761,485	55,787	3,419	1,926	4,404
LA	P-P	B	52	6,536	79,381	293,248	21,477	0	0	0
LA	P-V	B	967,856	0	0	0	0	82,045	843,830	41,981
LA	PORT TOTALS		1,772,598	281,428	1,298,725	5,749,340	446,054	191,374	1,475,206	105,369
LB	A-E	B	45,510	136,530	409,543	3,572,089	261,660	10,479	9,982	25,092
LB	B-E	B	3,906	11,712	35,121	306,367	22,448	1,156	815	1,936
LB	B-P	B	81	7,530	91,397	337,640	24,732	21	4	21
LB	B-V	B	417,306	0	0	0	0	44,059	358,898	14,352
LB	F-V	B	56,122	0	0	0	0	7,669	48,265	0
LB	H-E	L	23,307	59,716	333,638	593,509	52,978	3,432	5,210	14,400
LB	M-M	L	34,383	87,390	444,112	67,476	47,276	4,470	8,252	21,661
LB	M-S	L	4,811	17,813	47,883	11,169	7,161	625	1,155	3,031
LB	M-T	L	12,198	22,753	197,051	20,841	13,862	1,586	2,928	7,685
LB	P-E	B	6,006	18,004	54,011	471,093	34,509	1,911	1,227	2,876
LB	P-P	B	72	5,996	72,826	269,025	19,702	1	0	1
LB	P-V	B	433,389	0	0	0	0	50,505	374,421	8,464

#2581-01-0681

TABLE 3.16a (continued)

S C O T T E N V I R O N M E N T A L T E C H N O L O G Y I N C.

CARB MARINE EMISSIONS INVENTORY
DATA EDIT LISTING — 1976 EMISSIONS SUMMARY BY SOURCE BY PORT - CALIFORNIA COASTAL WATERS

DATE 08/28/80
PAGE 0004

PORT	A/S CODE	LOCATION	POUNDS POLLUTANTS THC	CO	NOX	SOX	PART	POUNDS REACTIVE HC CLASS 1	CLASS 2	CLASS 3
LB	PORT TOTALS		1,037,091	367,444	1,684,982	5,649,209	484,328	126,114	811,157	99,519
MB	A-E	B	49	149	445	3,877	282	20	9	21
MB	B-E	B	269	809	2,409	21,018	1,536	105	51	115
MB	B-P	B	0	691	8,403	31,029	2,272	0	0	0
MB	B-V	B	14,324	0	0	0	0	2,003	12,321	0
MB	M-T	L	100	705	2,182	237	152	13	24	63
MB	P-E	B	7	21	62	537	39	3	1	3
MB	P-P	B	0	35	421	1,554	114	0	0	0
MB	PORT TOTALS		14,749	2,410	13,922	56,252	4,395	2,144	12,406	202
MGS	B-E	B	54	161	482	4,202	309	21	10	23
MGS	B-P	B	3	152	1,840	6,797	498	0	0	0
MGS	B-V	B	740	0	0	0	0	104	636	0
MGS	P-E	B	62	183	546	4,783	351	24	11	27
MGS	P-P	B	2	139	1,691	6,244	457	0	0	0
MGS	PORT TOTALS		861	635	4,561	22,026	1,615	149	657	50
ML	B-E	B	421	1,266	3,783	32,997	2,416	165	80	178
ML	B-P	B	4	1,146	13,954	51,533	3,775	0	0	0
ML	B-V	B	21,650	0	0	0	0	3,035	18,615	0
ML	M-T	L	187	1,321	4,091	445	285	24	45	118
ML	P-E	B	155	470	1,412	12,315	902	52	32	70
ML	P-P	B	0	290	3,516	12,997	952	0	0	0
ML	PORT TOTALS		22,417	4,493	26,756	110,287	8,330	3,276	18,772	366
MTZ	A-E	B	193	577	1,729	15,086	1,105	75	38	81
MTZ	B-E	B	2,295	6,899	20,679	180,339	13,210	824	453	1,029
MTZ	B-P	B	35	3,091	37,518	138,627	10,155	0	0	0
MTZ	B-V	B	227,749	0	0	0	0	28,990	196,722	2,035
MTZ	F-V	B	2,473	0	0	0	0	347	2,126	0
MTZ	P-E	B	3,558	10,672	32,011	279,181	20,447	1,252	700	1,599
MTZ	P-P	B	11	2,427	29,399	108,604	7,954	0	0	0
MTZ	P-V	B	648,436	0	0	0	0	45,256	562,676	40,504
MTZ	PORT TOTALS		884,750	23,666	121,336	721,837	52,871	76,744	762,715	45,248
NCW	M-M	L	49,356	177,397	740,457	66,943	69,579	6,416	11,845	31,094
NCW	M-T	L	21,012	173,114	547,182	50,272	32,226	2,732	5,042	13,238
NCW	S-E	L	380,155	1,164,187	6,591,151	14,123,240	1,191,860	49,614	90,537	238,535
NCW	T-E	L	34,565	108,569	619,814	1,377,489	115,380	4,944	8,306	21,714
NCW	PORT TOTALS		485,088	1,623,267	8,498,604	15,617,944	1,409,045	63,706	115,730	304,581

#2581-01-0681

TABLE 3.16a (continued)

S C O T T E N V I R O N M E N T A L T E C H N O L O G Y I N C.

CARB MARINE EMISSIONS INVENTORY
DATA EDIT LISTING — 1976 EMISSIONS SUMMARY BY SOURCE BY PORT - CALIFORNIA COASTAL WATERS

DATE 08/28/80
PAGE 0005

PORT	A/S CODE	LOCATION	POUNDS POLLUTANTS THC	CO	NOX	SOX	PART	POUNDS REACTIVE HC CLASS 1	CLASS 2	CLASS 3
NYP	A-E	B	4	11	33	287	21	2	1	2
NYP	PORT TOTALS		4	11	33	287	21	2	1	2
OAK	A-E	B	21,643	64,851	194,531	1,696,808	124,293	6,902	4,400	10,395
OAK	PORT TOTALS		21,643	64,851	194,531	1,696,808	124,293	6,902	4,400	10,395
OLM	A-E	B	63	190	570	4,974	364	23	13	27
OLM	B-E	B	498	1,489	4,465	38,947	2,856	192	96	209
OLM	B-P	B	17	1,128	13,663	50,469	3,698	0	0	0
OLM	B-V	B	399	0	0	0	0	33	367	0
OLM	P-E	B	2,219	6,644	19,939	173,889	12,743	870	423	935
OLM	P-P	B	10	932	11,284	41,686	3,054	0	0	0
OLM	P-V	B	390,684	0	0	0	0	41,536	338,245	10,922
OLM	PORT TOTALS		393,890	10,383	49,921	309,965	22,715	42,654	339,144	12,093
OZL	A-E	B	13	39	118	1,034	76	5	2	5
OZL	B-E	B	34	100	301	2,627	192	13	6	15
OZL	B-P	B	0	47	572	2,114	155	0	0	0
OZL	B-V	B	2,018	0	0	0	0	0	2,018	0
OZL	P-E	B	31	91	275	2,405	176	12	6	14
OZL	P-P	B	0	32	373	1,378	100	0	0	0
OZL	PORT TOTALS		2,096	309	1,639	9,558	699	30	2,032	34
PCH	A-E	B	3,273	9,819	29,454	256,902	18,820	1,176	643	1,453
PCH	PORT TOTALS		3,273	9,819	29,454	256,902	18,820	1,176	643	1,453
PH	B-E	B	356	1,057	3,176	27,709	2,030	119	71	166
PH	B-P	B	10	1,008	12,226	45,167	3,311	0	0	0
PH	B-V	B	16,191	0	0	0	0	2,268	13,923	0
PH	P-E	B	141	416	1,251	10,915	799	61	30	61
PH	P-P	B	14	523	6,361	23,491	1,723	0	0	0
PH	PORT TOTALS		16,712	3,004	23,014	107,282	7,863	2,448	14,024	227
PIT	A-E	B	397	1,192	3,582	31,244	2,288	94	92	216
PIT	B-E	B	429	1,285	3,866	33,698	2,469	134	80	224
PIT	B-P	B	0	1,213	14,709	54,353	3,982	0	0	0
PIT	B-V	B	21,797	0	0	0	0	3,050	18,747	0
PIT	P-E	B	169	507	1,522	13,260	970	64	30	75
PIT	P-P	B	0	271	3,284	12,125	688	0	0	0

#2581-01-0681

TABLE 3.16a (continued)

S C O T T E N V I R O N M E N T A L T E C H N O L O G Y I N C.

CARB MARINE EMISSIONS INVENTORY
DATA EDIT LISTING — 1976 EMISSIONS SUMMARY BY SOURCE BY PORT - CALIFORNIA COASTAL WATERS

DATE 08/28/80
PAGE 0006

PORT	A/S CODE	LOCATION	POUNDS POLLUTANTS THC	CO	NOX	SOX	PART	POUNDS REACTIVE HC CLASS 1	CLASS 2	CLASS 3
PIT	PORT TOTALS		22,792	4,468	26,963	144,680	10,597	3,342	18,949	515
PSL	B-E	B	199	599	1,799	15,702	1,148	80	39	81
PSL	B-P	B	0	330	4,262	15,734	1,152	0	0	0
PSL	B-V	B	11,019	0	0	0	0	815	9,478	728
PSL	M-T	L	249	1,762	5,455	593	380	32	60	157
PSL	P-E	B	559	1,683	5,017	43,810	3,209	222	110	238
PSL	P-P	B	0	110	1,318	4,869	357	0	0	0
PSL	P-V	B	138,476	0	0	0	0	19,191	119,101	185
PSL	PORT TOTALS		150,502	4,504	17,851	80,708	6,246	20,340	128,788	1,389
RC	A-E	B	56	169	505	4,408	323	17	11	26
RC	B-E	B	17	51	153	1,336	98	7	3	7
RC	B-P	B	0	11	135	499	37	0	0	0
RC	B-V	B	808	0	0	0	0	0	808	0
RC	F-V	B	24	0	0	0	0	3	21	0
RC	P-E	B	65	197	587	5,119	374	24	14	26
RC	P-P	B	0	49	595	2,198	161	0	0	0
RC	PORT TOTALS		970	477	1,975	13,560	993	51	857	63
RCH	A-E	B	4,544	13,635	40,907	356,731	26,127	1,325	936	2,305
RCH	B-E	B	2,644	7,934	23,792	207,487	15,196	765	557	1,325
RCH	B-P	B	76	6,079	73,852	272,818	19,982	0	0	0
RCH	B-V	B	604,165	0	0	0	0	83,810	519,832	523
RCH	F-V	B	25,386	0	0	0	0	3,555	21,833	0
RCH	P-E	B	8,918	26,751	80,230	699,781	51,259	3,305	1,726	3,892
RCH	P-P	B	74	5,987	72,660	268,412	19,665	0	0	0
RCH	P-V	B	895,302	0	0	0	0	119,742	746,180	29,383
RCH	PORT TOTALS		1,541,109	60,386	291,441	1,805,229	132,229	212,502	1,291,064	37,428
SAC	A-E	B	2,630	7,879	23,627	206,093	15,098	494	599	1,543
SAC	PORT TOTALS		2,630	7,879	23,627	206,093	15,098	494	599	1,543
SCL	B-V	B	179,925	0	0	0	0	25,191	154,736	0
SCL	L-E	B	3,506	10,405	185,259	1,024,120	75,122	1,299	679	1,529
SCL	L-P	B	497	1,491	27,835	156,072	11,434	191	92	203
SCL	P-V	B	1,184,147	0	0	0	0	165,404	1,018,368	380
SCL	PORT TOTALS		1,368,075	11,896	213,094	1,180,192	86,556	192,085	1,173,875	2,112
SCW	M-M	L	155,246	424,048	2,063,649	307,376	214,436	20,182	37,259	97,805
SCW	M-T	L	20,142	147,072	446,450	13,606	27,808	2,618	4,834	12,690
SCW	S-E	L	431,084	1,255,294	6,868,243	12,998,278	1,130,659	55,721	103,062	270,456

TABLE 3.16a (continued)

S C O T T E N V I R O N M E N T A L T E C H N O L O G Y I N C.

CARB MARINE EMISSIONS INVENTORY
DATA EDIT LISTING — 1976 EMISSIONS SUMMARY BY SOURCE BY PORT - CALIFORNIA COASTAL WATERS

DATE 08/28/80
PAGE 0007

PORT	A/S CODE	LOCATION	POUNDS POLLUTANTS THC	CO	NOX	SOX	PART	POUNDS REACTIVE HC CLASS 1	CLASS 2	CLASS 3
SCW	T-E	L	58,984	173,913	956,325	1,856,663	160,534	8,354	14,022	37,128
SCW	PORT TOTALS		665,456	2,000,327	10,334,667	15,175,923	1,533,437	86,875	159,177	418,079
SD	A-E	B	3,086	9,244	27,716	241,781	17,715	913	643	1,531
SD	B-E	B	11	33	99	861	63	4	2	5
SD	B-P	B	0	17	210	775	57	0	0	0
SD	B-V	B	6	0	0	0	0	0	6	0
SD	F-P	A	1	169	2,051	7,573	555	0	0	0
SD	F-V	B	3,852	0	0	0	0	538	3,314	0
SD	H-E	L	752	1,947	11,512	23,784	2,051	103	164	475
SD	M-M	L	263,088	668,682	3,398,220	516,310	361,746	34,201	63,141	165,745
SD	M-T	L	1,630	13,340	42,450	3,900	2,500	212	391	1,027
SD	P-E	B	18	56	169	1,474	108	7	3	7
SD	P-P	B	0	30	358	1,323	97	0	0	0
SD	P-V	B	1,745	0	0	0	0	244	1,501	0
SD	PORT TOTALS		274,189	693,518	3,482,785	797,781	384,892	36,222	69,165	168,790
SEQ	A-E	B	37	113	339	2,956	216	14	7	16
SEQ	B-E	B	573	1,719	5,156	44,981	3,294	136	127	311
SEQ	B-P	B	13	816	9,911	36,608	2,681	0	0	0
SEQ	B-V	B	78,831	0	0	0	0	11,035	67,796	0
SEQ	P-E	B	650	1,939	5,823	50,796	3,719	227	129	296
SEQ	P-P	B	7	491	5,960	22,016	1,613	0	0	0
SEQ	P-V	B	65,317	0	0	0	0	9,007	56,190	121
SEQ	PORT TOTALS		145,428	5,078	27,189	157,357	11,523	20,419	124,249	744
SF	A-E	B	20,395	61,239	133,761	1,602,774	117,399	6,577	4,113	9,685
SF	D-E	B	0	0	0	0	0	0	0	0
SF	F-P	A	0	92	1,132	4,184	306	0	0	0
SF	F-V	B	2,730	0	0	0	0	385	2,346	0
SF	P-V	B	6	0	0	0	0	0	6	0
SF	PORT TOTALS		23,131	61,331	184,893	1,606,958	117,705	6,962	6,465	9,685
STK	A-E	B	1,499	4,502	13,498	117,722	8,626	296	337	867
STK	B-E	B	50	150	448	3,909	286	19	9	21
STK	B-P	B	0	50	605	2,235	164	0	0	0
STK	B-V	B	1,642	0	0	0	0	0	1,842	0
STK	P-E	B	157	464	1,392	12,156	891	28	36	92
STK	P-P	B	0	154	1,879	6,944	509	0	0	0
STK	P-V	B	1,667	0	0	0	0	233	1,434	0
STK	PORT TOTALS		5,215	5,320	17,822	142,966	10,476	578	3,658	980

TABLE 3.16a (continued

S C O T T E N V I R O N M E N T A L T E C H N O L O G Y I N C.

CARB MARINE EMISSIONS INVENTORY
DATA EDIT LISTING

1976 EMISSIONS SUMMARY BY SOURCE BY PORT - CALIFORNIA COASTAL WATERS

DATE 08/28/80
PAGE 0008

PORT	A/S CODE	LOCATION	POUNDS POLLUTANTS THC	CO	NOX	SOX	PART	POUNDS CLASS 1	REACTIVE HC CLASS 2	CLASS 3
VEN	H-E	L	0	1	10	56	4	0	0	0
VEN	M-T	L	126	466	1,254	392	187	16	30	79
VEN	P-E	B	527	1,585	4,753	41,401	3,028	222	107	226
VEN	P-V	B	356,247	0	0	0	0	49,291	306,466	490
VEN	PORT TOTALS		356,900	2,052	6,017	41,849	3,219	49,529	306,603	795
	GRAND TOTALS		13,093,546	6,068,688	30,341,329	57,969,333	5,540,224	1,549,677	10,030,524	1,507,934

#2581-01-0681

TABLE 3.17

@10725

EMISSION INVENTORY BY SOURCE/ACTIVITY

S C O T T E N V I R O N M E N T A L T E C H N O L O G Y I N C.

CARB MARINE EMISSIONS INVENTORY
DATA EDIT LISTING — 1976 EMISSIONS SUMMARY BY PORT BY SOURCE - CALIFORNIA COASTAL WATERS

DATE 09/30/80
PAGE 0001

PORT	A/S CODE	LOCATION	POUNDS POLLUTANTS THC	CO	NOX	SOX	PART	POUNDS REACTIVE HC CLASS 1	CLASS 2	CLASS 3
ALC	A-E	B	0	0	0	0	0	0	0	0
ALM	A-E	B	1,975	5,918	17,759	154,914	11,344	445	428	1,115
ANT	A-E	B	122	361	1,082	9,427	689	37	24	65
AVN	A-E	B	12	38	113	987	72	5	2	5
BAY	A-E	B	10,132	30,407	91,200	795,337	58,258	2,883	2,055	5,141
BEN	A-E	B	821	2,472	7,412	64,655	4,737	132	188	517
BSY	A-E	B	149	447	1,342	11,703	857	58	28	63
CRK	A-E	B	486	1,461	4,394	38,302	2,806	165	102	225
EB	A-E	B	135	404	1,212	10,559	774	49	26	58
LA	A-E	B	40,823	122,486	367,408	3,204,619	234,722	9,846	8,814	22,154
LB	A-E	B	45,510	136,530	409,543	3,572,089	261,660	10,479	9,982	25,092
MB	A-E	B	49	149	445	3,877	282	20	9	21
MTZ	A-E	B	193	577	1,729	15,086	1,105	75	38	81
NYP	A-E	B	4	11	33	287	21	2	1	2
OAK	A-E	B	21,643	64,851	194,531	1,696,808	124,293	6,902	4,400	10,395
OLM	A-E	B	63	190	570	4,974	364	23	13	27
OZL	A-E	B	13	39	118	1,034	76	5	2	5
PCH	A-E	B	3,273	9,819	29,454	256,902	18,820	1,176	643	1,453
PIT	A-E	B	397	1,192	3,582	31,244	2,288	94	92	216
RC	A-E	B	56	169	505	4,408	323	17	11	28
RCH	A-E	B	4,544	13,635	40,907	356,731	26,127	1,325	936	2,305
SAC	A-E	B	2,630	7,879	23,627	206,093	15,098	494	599	1,543
SD	A-E	B	3,086	9,244	27,716	241,781	17,715	913	643	1,531
SEQ	A-E	B	37	113	339	2,956	216	14	7	16
SF	A-E	B	20,395	61,239	183,761	1,602,774	117,399	6,577	4,113	9,685
STK	A-E	B	1,499	4,502	13,498	117,722	8,626	298	337	867
A-E	A/S	TOTALS	158,047	474,133	1,422,280	12,405,269	908,672	42,034	33,493	82,610
BAY	A-P	B	8	23	68	592	43	1	2	5
A-P	A/S	TOTALS	8	23	68	592	43	1	2	5
AVN	B-E	B	642	1,921	5,745	50,140	3,669	252	122	272
BAY	B-E	B	405	1,214	3,643	31,766	2,326	115	84	206
BEN	B-E	B	1,689	5,072	15,207	132,631	9,711	602	333	757
CRP	B-E	B	36	109	329	2,862	210	14	7	15
ENC	B-E	B	205	609	1,824	15,918	1,168	80	38	86
ES	B-E	B	2,087	6,261	18,775	163,765	11,991	429	471	1,186
HB	B-E	B	259	779	2,337	20,382	1,490	74	55	130
LA	B-E	B	4,860	14,571	43,702	381,119	27,911	1,467	1,005	2,387
LB	B-E	B	3,906	11,712	35,121	306,367	22,448	1,156	815	1,936
MB	B-E	B	269	809	2,409	21,018	1,536	105	51	115
MGS	B-E	B	54	161	482	4,202	309	21	10	23
ML	B-E	B	421	1,266	3,783	32,997	2,416	165	80	178
MTZ	B-E	B	2,295	6,899	20,679	180,339	13,210	824	453	1,029
OLM	B-E	B	498	1,489	4,465	38,947	2,856	192	96	209

#2581-01-0681

TABLE 3.17 (continued)

SCOTT ENVIRONMENTAL TECHNOLOGY INC.

CARB MARINE EMISSIONS INVENTORY
DATA EDIT LISTING — 1976 EMISSIONS SUMMARY BY PORT BY SOURCE - CALIFORNIA COASTAL WATERS

DATE 09/30/80
PAGE 0002

PORT	A/S CODE	LOCATION	POUNDS POLLUTANTS THC	CO	NOX	SOX	PART	POUNDS REACTIVE HC CLASS 1	CLASS 2	CLASS 3
OZL	B-E	B	34	100	301	2,627	192	13	6	15
PH	B-E	B	356	1,057	3,176	27,709	2,030	119	71	166
PIT	B-E	B	429	1,285	3,866	33,698	2,469	134	80	224
PSL	B-E	B	199	599	1,799	15,702	1,148	80	39	81
RC	B-E	B	17	51	153	1,336	98	7	3	7
RCH	B-E	B	2,644	7,934	23,792	207,487	15,196	765	557	1,325
SD	B-E	B	11	33	99	861	63	4	2	5
SEQ	B-E	B	573	1,719	5,156	44,981	3,294	136	127	311
STK	B-E	B	50	150	448	3,909	286	19	9	21
B-E	A/S	TOTALS	21,939	65,800	197,291	1,720,763	126,027	6,773	4,514	10,684
AVN	B-P	B	11	1,067	12,904	47,667	3,491	0	0	0
BAY	B-P	B	0	138	1,684	6,224	455	0	0	0
BEN	B-P	B	28	3,249	39,435	145,678	10,669	0	0	0
CRP	B-P	B	0	35	426	1,571	115	0	0	0
ENC	B-P	B	11	789	9,593	35,438	2,595	0	0	0
ES	B-P	B	77	5,635	68,438	252,809	18,516	36	0	36
HB	B-P	B	10	583	7,072	26,133	1,915	0	0	0
LA	B-P	B	95	7,490	90,960	336,009	24,604	16	0	16
LB	B-P	B	81	7,530	91,397	337,640	24,732	21	4	21
MB	B-P	B	0	691	8,403	31,029	2,272	0	0	0
MGS	B-P	B	3	152	1,840	6,797	498	0	0	0
ML	B-P	B	4	1,146	13,954	51,533	3,775	0	0	0
MTZ	B-P	B	35	3,091	37,518	138,627	10,155	0	0	0
OLM	B-P	B	17	1,128	13,663	50,469	3,698	0	0	0
OZL	B-P	B	0	47	572	2,114	155	0	0	0
PH	B-P	B	10	1,008	12,226	45,167	3,311	0	0	0
PIT	B-P	B	0	1,213	14,709	54,353	3,982	0	0	0
PSL	B-P	B	0	350	4,262	15,734	1,152	0	0	0
RC	B-P	B	0	11	135	499	37	0	0	0
RCH	B-P	B	76	6,079	73,852	272,818	19,982	0	0	0
SD	B-P	B	0	17	210	775	57	0	0	0
SEQ	B-P	B	13	816	9,911	36,608	2,681	0	0	0
STK	B-P	B	0	50	605	2,235	164	0	0	0
B-P	A/S	TOTALS	471	42,315	513,769	1,897,927	139,011	73	4	73
AVN	B-V	B	72,763	0	0	0	0	10,180	62,577	7
BAY	B-V	B	14,498	0	0	0	0	2,030	12,468	0
BEN	B-V	B	271,342	0	0	0	0	37,788	233,556	0
CRP	B-V	B	4,356	0	0	0	0	44	3,748	568
ENC	B-V	B	9,097	0	0	0	0	1,276	7,821	0
ES	B-V	B	261,548	0	0	0	0	35,853	224,935	762
HB	B-V	B	28,480	0	0	0	0	3,990	24,491	0
LA	B-V	B	546,735	0	0	0	0	66,305	471,942	8,491
LB	B-V	B	417,306	0	0	0	0	44,059	358,898	14,352

#2581-01-0681

TABLE 3.17 (continued)

SCOTT ENVIRONMENTAL TECHNOLOGY INC.

CARB MARINE EMISSIONS INVENTORY
DATA EDIT LISTING — 1976 EMISSIONS SUMMARY BY PORT BY SOURCE - CALIFORNIA COASTAL WATERS — DATE 09/30/80 PAGE 0003

PORT	A/S CODE	LOCATION	POUNDS POLLUTANTS THC	CO	NOX	SOX	PART	POUNDS CLASS 1	REACTIVE HC CLASS 2	CLASS 3
MB	B-V	B	14,324	0	0	0	0	2,003	12,321	0
MGS	B-V	B	740	0	0	0	0	104	636	0
ML	B-V	B	21,650	0	0	0	0	3,035	18,615	0
MTZ	B-V	B	227,749	0	0	0	0	28,990	196,722	2,035
OLM	B-V	B	399	0	0	0	0	33	367	0
OZL	B-V	B	2,048	0	0	0	0	0	2,048	0
PH	B-V	B	16,191	0	0	0	0	2,268	13,923	0
PIT	B-V	B	21,797	0	0	0	0	3,050	18,747	0
PSL	B-V	B	11,019	0	0	0	0	815	9,478	728
RC	B-V	B	808	0	0	0	0	0	808	0
RCH	B-V	B	604,165	0	0	0	0	83,810	519,832	523
SCL	B-V	B	179,925	0	0	0	0	25,191	154,736	0
SD	B-V	B	6	0	0	0	0	0	6	0
SEQ	B-V	B	78,831	0	0	0	0	11,035	67,796	0
STK	B-V	B	1,842	0	0	0	0	0	1,842	0
B-V	A/S	TOTALS	2,807,589	0	0	0	0	361,859	2,418,283	27,466
ALM	D-E	B	0	0	0	0	0	0	0	0
SF	D-E	B	0	0	0	0	0	0	0	0
D-E	A/S	TOTALS	0	0	0	0	0	0	0	0
AVN	F-P	A	2	259	3,150	11,636	852	0	0	0
LA	F-P	A	35	2,348	28,528	105,385	7,718	13	10	13
SD	F-P	A	1	169	2,051	7,573	555	0	0	0
SF	F-P	A	0	92	1,132	4,184	306	0	0	0
F-P	A/S	TOTALS	38	2,868	34,861	128,778	9,431	13	10	13
AVN	F-V	B	5,918	0	0	0	0	829	5,090	0
LA	F-V	B	160,790	0	0	0	0	22,513	138,287	0
LB	F-V	B	56,122	0	0	0	0	7,869	48,265	0
MTZ	F-V	B	2,473	0	0	0	0	347	2,126	0
RC	F-V	B	24	0	0	0	0	3	21	0
RCH	F-V	B	25,386	0	0	0	0	3,555	21,833	0
SD	F-V	B	3,852	0	0	0	0	538	3,314	0
SF	F-V	B	2,730	0	0	0	0	385	2,346	0
F-V	A/S	TOTALS	257,295	0	0	0	0	36,039	221,282	0
BAY	H-E	L	52,659	135,299	783,402	1,559,606	135,072	7,111	11,846	31,850
ES	H-E	L	0	29	385	2,162	160	0	0	0
LA	H-E	L	28,725	73,464	397,215	644,963	58,902	4,070	6,291	17,784
LB	H-E	L	23,307	59,716	333,038	593,509	52,978	3,432	5,210	14,400
SD	H-E	L	752	1,947	11,512	23,784	2,051	103	164	475
VEN	H-E	L	0	1	10	56	4	0	0	0

#2581-01-0681

TABLE 3.17 (continued)

SCOTT ENVIRONMENTAL TECHNOLOGY INC.

CARB MARINE EMISSIONS INVENTORY
DATA EDIT LISTING — 1976 EMISSIONS SUMMARY BY PORT BY SOURCE - CALIFORNIA COASTAL WATERS

DATE 09/30/80
PAGE 0004

PORT	A/S CODE	LOCATION	POUNDS POLLUTANTS THC	CO	NOX	SOX	PART	POUNDS REACTIVE HC CLASS 1	CLASS 2	CLASS 3
H-E	A/S	TOTALS	105,443	270,456	1,525,562	2,824,080	249,167	14,716	23,511	64,509
SCL	L-E	B	3,506	10,405	185,259	1,024,120	75,122	1,299	679	1,529
L-E	A/S	TOTALS	3,506	10,405	185,259	1,024,120	75,122	1,299	679	1,529
SCL	L-P	B	497	1,491	27,835	156,072	11,434	191	92	203
L-P	A/S	TOTALS	497	1,491	27,835	156,072	11,434	191	92	203
BAY	M-M	L	75,751	192,534	978,453	79,286	104,158	9,848	18,180	47,723
LB	M-M	L	34,383	87,390	444,112	67,476	47,276	4,470	8,252	21,661
NCW	M-M	L	49,356	177,397	740,457	66,943	69,579	6,416	11,845	31,094
SCW	M-M	L	155,246	424,048	2,063,649	307,376	214,438	20,182	37,259	97,805
SD	M-M	L	263,088	668,682	3,398,220	516,310	361,746	34,201	63,141	165,745
M-M	A/S	TOTALS	577,824	1,550,051	7,624,891	1,037,391	797,195	75,117	138,677	364,028
BAY	M-S	L	63,775	162,095	797,190	834,392	87,691	8,291	15,306	40,178
LA	M-S	L	720	2,665	7,163	1,671	1,071	94	173	454
LB	M-S	L	4,811	17,813	47,883	11,169	7,161	625	1,155	3,031
M-S	A/S	TOTALS	69,306	182,573	852,236	847,232	95,923	9,010	16,634	43,663
BAY	M-T	L	27,738	196,035	607,048	65,965	42,285	3,606	6,657	17,475
COP	M-T	L	24	87	234	55	35	3	6	15
CRP	M-T	L	60	224	602	140	90	8	14	38
EB	M-T	L	710	5,020	15,547	1,689	1,083	92	170	447
GV	M-T	L	3	12	33	8	5	0	1	2
LA	M-T	L	12,198	22,753	197,051	20,841	13,862	1,586	2,928	7,685
LB	M-T	L	12,198	22,753	197,051	20,841	13,862	1,586	2,928	7,685
MB	M-T	L	100	705	2,182	237	152	13	24	63
ML	M-T	L	187	1,321	4,091	445	285	24	45	118
NCW	M-T	L	21,012	173,114	547,182	50,272	32,226	2,732	5,042	13,238
PSL	M-T	L	249	1,762	5,455	593	380	32	60	157
SCW	M-T	L	20,142	147,072	446,450	43,606	27,808	2,618	4,834	12,690
SD	M-T	L	1,630	13,340	42,450	3,900	2,500	212	391	1,027
VEN	M-T	L	126	466	1,254	392	187	16	30	79
M-T	A/S	TOTALS	96,377	584,664	2,066,630	178,984	134,760	12,528	23,130	60,719
AVN	P-E	B	368	1,106	3,315	28,914	2,118	123	73	174
BAY	P-E	B	5,618	16,846	50,531	440,730	32,289	1,565	1,198	2,878
BEN	P-E	B	850	2,559	7,670	66,888	4,900	296	168	389
COP	P-E	B	184	555	1,664	14,492	1,062	71	35	77
CRP	P-E	B	338	1,007	3,026	26,364	1,932	133	66	145

#2581-01-0681

TABLE 3.17 (continued)

SCOTT ENVIRONMENTAL TECHNOLOGY INC.

CARB MARINE EMISSIONS INVENTORY
DATA EDIT LISTING — 1976 EMISSIONS SUMMARY BY PORT BY SOURCE - CALIFORNIA COASTAL WATERS

DATE 09/30/80
PAGE 0005

PORT	A/S CODE	LOCATION	POUNDS POLLUTANTS THC	CO	NOX	SOX	PART	POUNDS REACTIVE HC CLASS 1	CLASS 2	CLASS 3
EB	P-E	B	2,169	6,508	19,525	170,283	12,469	850	410	908
ENC	P-E	B	453	1,357	4,076	35,554	2,609	175	85	194
ES	P-E	B	6,029	18,094	54,315	473,727	34,705	1,800	1,254	2,993
GV	P-E	B	6	20	60	530	39	3	1	3
HB	P-E	B	420	1,256	3,766	32,846	2,406	82	95	240
LA	P-E	B	9,709	29,115	87,317	761,485	55,787	3,419	1,926	4,404
LB	P-E	B	6,006	18,004	54,011	471,093	34,509	1,911	1,227	2,876
MB	P-E	B	7	21	62	537	39	3	1	3
MGS	P-E	B	62	183	548	4,783	351	24	11	27
ML	P-E	B	155	470	1,412	12,315	902	52	32	70
MTZ	P-E	B	3,558	10,672	32,011	279,181	20,447	1,252	700	1,599
OLM	P-E	B	2,219	6,644	19,939	173,889	12,743	870	423	935
OZL	P-E	B	31	91	275	2,405	176	12	6	14
PH	P-E	B	141	416	1,251	10,915	799	61	30	61
PIT	P-E	B	169	507	1,522	13,260	970	64	30	75
PSL	P-E	B	559	1,683	5,017	43,810	3,209	222	110	238
RC	P-E	B	65	197	587	5,119	374	24	14	28
RCH	P-E	B	8,918	26,751	80,230	699,781	51,259	3,305	1,726	3,892
SD	P-E	B	18	56	169	1,474	108	7	3	7
SEQ	P-E	B	650	1,939	5,823	50,796	3,719	227	129	296
STK	P-E	B	157	464	1,392	12,156	891	28	36	92
VEN	P-E	B	527	1,585	4,753	41,401	3,028	222	107	226
P-E	A/S	TOTALS	49,386	148,106	444,267	3,874,728	283,840	16,801	9,896	22,844
AVN	P-P	B	1	194	2,377	8,782	644	0	0	0
BAY	P-P	B	24	2,017	24,500	90,503	6,627	0	0	0
BEN	P-P	B	7	723	8,817	32,567	2,384	0	0	0
CRP	P-P	B	0	75	902	3,338	245	0	0	0
EB	P-P	B	0	2	23	85	6	0	0	0
ENC	P-P	B	20	1,019	12,385	45,755	3,351	0	0	0
ES	P-P	B	52	4,922	59,768	220,797	16,172	1	0	1
HB	P-P	B	12	886	10,769	39,786	2,914	0	0	0
LA	P-P	B	52	6,536	79,381	293,248	21,477	0	0	0
LB	P-P	B	72	5,996	72,826	269,025	19,702	1	0	1
MB	P-P	B	0	35	421	1,554	114	0	0	0
MGS	P-P	B	2	139	1,691	6,244	457	0	0	0
ML	P-P	B	0	290	3,516	12,997	952	0	0	0
MTZ	P-P	B	11	2,427	29,399	108,604	7,954	0	0	0
OLM	P-P	B	10	932	11,284	41,686	3,054	0	0	0
OZL	P-P	B	0	32	373	1,378	100	0	0	0
PH	P-P	B	14	523	6,361	23,491	1,723	0	0	0
PIT	P-P	B	0	271	3,284	12,125	888	0	0	0
PSL	P-P	B	0	110	1,318	4,869	357	0	0	0
RC	P-P	B	0	49	595	2,198	161	0	0	0
RCH	P-P	B	74	5,987	72,660	268,412	19,665	0	0	0
SD	P-P	B	0	30	358	1,323	97	0	0	0

#2581-01-0681

TABLE 3.17 (continued)

SCOTT ENVIRONMENTAL TECHNOLOGY INC.

CARB MARINE EMISSIONS INVENTORY
DATA EDIT LISTING — 1976 EMISSIONS SUMMARY BY PORT BY SOURCE - CALIFORNIA COASTAL WATERS

DATE 09/30/80
PAGE 0006

PORT	A/S CODE	LOCATION	POUNDS POLLUTANTS THC	CO	NOX	SOX	PART	POUNDS REACTIVE HC CLASS 1	CLASS 2	CLASS 3
SEQ	P-P	B	7	491	5,960	22,016	1,613	0	0	0
STK	P-P	B	0	154	1,879	6,944	509	0	0	0
P-P	A/S	TOTALS	358	33,840	410,847	1,547,727	111,166	2	0	2
AVN	P-V	B	302,510	0	0	0	0	8,363	260,309	33,844
BAY	P-V	B	544,526	0	0	0	0	73,763	469,990	775
BEN	P-V	B	579,212	0	0	0	0	13,743	503,202	62,277
COP	P-V	B	44,181	0	0	0	0	5,023	37,996	1,163
CRP	P-V	B	50,247	0	0	0	0	7,033	43,214	0
EB	P-V	B	698,862	0	0	0	0	96,084	601,026	1,753
ES	P-V	B	734,026	0	0	0	0	67,619	636,934	29,480
GV	P-V	B	3,838	0	0	0	0	506	3,301	31
LA	P-V	B	967,856	0	0	0	0	82,045	843,830	41,981
LB	P-V	B	433,389	0	0	0	0	50,505	374,421	8,464
MTZ	P-V	B	648,436	0	0	0	0	45,256	562,676	40,504
OLM	P-V	B	390,684	0	0	0	0	41,536	338,245	10,922
PSL	P-V	B	138,476	0	0	0	0	19,191	119,101	185
RCH	P-V	B	895,302	0	0	0	0	119,742	746,180	29,383
SCL	P-V	B	1,184,147	0	0	0	0	165,404	1,018,368	380
SD	P-V	B	1,745	0	0	0	0	244	1,501	0
SEQ	P-V	B	65,317	0	0	0	0	9,007	56,190	121
SF	P-V	B	6	0	0	0	0	0	6	0
STK	P-V	B	1,667	0	0	0	0	233	1,434	0
VEN	P-V	B	356,247	0	0	0	0	49,291	306,466	490
P-V	A/S	TOTALS	8,040,674	0	0	0	0	854,588	6,924,390	261,753
NCW	S-E	L	380,155	1,164,187	6,591,151	14,123,240	1,191,860	49,614	90,537	238,535
SCW	S-E	L	431,084	1,255,294	6,868,243	12,998,278	1,130,659	55,721	103,062	270,456
S-E	A/S	TOTALS	811,239	2,419,481	13,459,394	27,121,518	2,322,519	105,335	193,599	508,991
NCW	T-E	L	34,565	108,569	619,814	1,377,489	115,380	4,944	8,306	21,714
SCW	T-E	L	58,984	173,913	956,325	1,856,663	160,534	8,354	14,022	37,128
T-E	A/S	TOTALS	93,549	282,482	1,576,139	3,234,152	275,914	13,298	22,328	58,842
		GRAND TOTALS	13,093,546	6,068,688	30,341,329	57,969,333	5,540,224	1,549,677	10,030,524	1,507,934

#2581-01-0681

Most of the 10 million pounds of Class II hydrocarbons were C_3 to C_6 saturates emitted during petroleum loading and ballasting. Of the 1.5 million pounds of Class III hydrocarbons, 16% were attributable to loading and ballasting emissions, principally from gasoline and solvents. The remaining 84% resulted from engine emissions. The dominant species in Class III were light olefinic hydrocarbons and oxygenates from diesel engines. Overall, commercial operations contributed 75% of the Class III hydrocarbons and military operations the remaining 25%.

3.4.3 Spatial Distribution

Emissions have been grouped into six major regional areas, as follows:

San Diego
Sea Lanes
Lightering
Los Angeles
Miscellaneous Coastal Ports
San Francisco

The Los Angeles area contains emissions associated with operations within the harbors of Los Angeles and Long Beach and also the petroleum terminals at El Segundo and Huntington Beach. The following ports/terminals are included in the San Francisco summary:

ALC - Alcatraz
ALM - Alameda
ANT - Antioch
AVN - Avon
BAY - San Francisco Bay
BEN - Benicia
BSY - Bethlehem Steel
CRK - Crockett
MTZ - Martinez
NYP - New York Point
OAK - Oakland
OLM - Oleum
OZL - Oxola
PCH - Point Chicago
PIT - Pittsburg
RC - Redwood City
RCH - Richmond
SAC - Sacramento
SEQ - Sequoia
SF - San Francisco
STK - Stockton

Lightering emissions include those generated during lightering operations off San Clemente Island and sea lane emissions include all emissions generated during vessel movement outside a harbor.

Table 3.18 presents a composite inventory of emissions for the six regional areas summarized. Details as to activities/source emissions within each summary are presented in Table 3.18a.

Presented in Table 3.19 are emissions generated within each California county. The total marine emissions were distributed in the following manner. For each county, the total of emissions from vessels at berth at all ports in the county are shown first. The entry Inland Waters refers to emissions in San Francisco Bay and its extensions for vessels in transit and at anchor. Bay lightering off Hunters Point is shown as a separate entry under San Francisco County. The In Port Waters entry for Los Angeles represents emissions during transit and anchorage within the breakwater for Los Angeles and Long Beach.

The emissions in Coastal Waters were distributed as per the California Air Resources Board definition of the offshore boundaries of coastal counties. The boundaries were extended west from the coast parallel to the northern boundary of California, and the emissions in each sea lane were then distributed based on the percent of that lane's total length which was off the short of each county. In the case of the Los Angeles-Orange County boundary, this procedure would have resulted in a line passing across land in Los Angeles County on the west side of Los Angeles Harbor. Therefore, the boundary was extended west from the coast at Seal Beach along the breakwaters of the ports of Long Beach and Los Angeles to Point Fermin and then westward. The lightering area off San Clemente Island was included in Los Angeles County because San Clemente Island is under the jurisdiction of Los Angeles County. These lighering emissions are listed as a line item. There are no emissions for coastal counties north of San Francisco because the sea lanes are outside of the California Coastal Waters and, thus, not included in the study area.

TABLE 3.18

EMISSION INVENTORY BY AREA

Area	lbs. THC	lbs. CO	lbs. NO_x	lbs. SO_x	lbs. Particulate	lbs. Class 1	Reactive Hydrocarbons Class 2	Class 3
San Diego	274,189	693,518	3,482,785	797,781	384,892	36,222	69,165	168,790
Sea Lanes	1,150,544	3,623,594	18,833,271	30,793,867	2,942,482	150,581	274,907	722,660
Lightering	1,368,076	11,896	213,094	1,180,192	86,556	192,085	1,173,875	2,112
Los Angeles	3,842,689	687,317	3,209,332	12,630,956	1,020,651	427,373	3,174,598	239,716
Coastal Ports	1,377,076	34,930	163,582	785,045	59,456	189,330	1,179,215	8,532
San Francisco	5,080,973	1,017,433	4,439,265	11,781,492	1,046,187	554,087	4,158,764	366,124
TOTAL	13,093,546	6,068,688	30,341,329	57,969,633	5,540,224	1,548,677	10,030,524	1,507,934

#2581-01-0681

TABLE 3.18a

@10230

AREA EMISSIONS BY SOURCE

@10230

S C O T T E N V I R O N M E N T A L T E C H N O L O G Y I N C.

CARB MARINE EMISSIONS INVENTORY
DATA EDIT LISTING 1976 EMISSIONS SUMMARY BY AREA3 BY SOURCE -SAN DIEGO

DATE 10/01/80
PAGE 0001

A/S CODE	POUNDS POLLUTANTS THC	CO	NOX	SOX	PART	POUNDS REACTIVE HC CLASS 1	CLASS 2	CLASS 3
A-E	3,086	9,244	27,716	241,784	17,715	913	643	1,531
B-E	11	33	99	864	63	4	2	5
B-P	0	17	210	775	57	0	0	0
B-V	6	0	0	0	0	0	6	0
F-P	1	169	2,051	7,573	555	0	0	0
F-V	3,852	0	0	0	0	538	3,314	0
H-E	752	1,947	11,512	23,784	2,051	103	164	475
M-M	263,088	668,682	3,398,220	516,310	361,746	34,201	63,141	165,745
M-T	1,630	13,340	42,450	3,900	2,500	212	391	1,027
P-E	18	56	169	1,474	108	7	3	7
P-P	0	30	358	1,323	97	0	0	0
P-V	1,745	0	0	0	0	244	1,501	0
AREA TOTALS	274,189	693,518	3,482,785	797,784	384,892	36,222	69,165	168,790
~~GRAND TOTALS~~	~~274,189~~	~~693,518~~	~~3,482,785~~	~~797,784~~	~~384,892~~	~~36,222~~	~~69,165~~	~~168,790~~

#2581-01-0681

TABLE 3.18a (continued)

SCOTT ENVIRONMENTAL TECHNOLOGY INC.

CARB MARINE EMISSIONS INVENTORY
DATA EDIT LISTING 1976 EMISSIONS SUMMARY BY AREAS BY SOURCE -SEA LANES/NCW-SCW

DATE 10/01/80
PAGE 0001

A/S CODE	POUNDS POLLUTANTS THC	CO	NOX	SOX	PART	POUNDS REACTIVE HC CLASS 1	CLASS 2	CLASS 3
M-M	204,602	601,445	2,804,106	374,319	284,015	26,598	49,104	128,899
M-T	41,154	320,186	993,632	63,878	60,034	5,350	9,876	25,928
S-E	811,239	2,419,481	13,459,394	27,121,518	2,322,549	105,335	193,599	508,991
T-E	93,549	282,482	1,576,139	3,234,152	275,914	13,298	22,328	58,842
AREA TOTALS	1,150,544	3,623,594	18,833,271	30,793,867	2,942,482	150,581	274,907	722,660
GRAND TOTALS	1,150,544	3,623,594	18,833,271	30,793,867	2,942,482	150,581	274,907	722,660

#2581-01-0681

TABLE 3.18a (continued)

SCOTT ENVIRONMENTAL TECHNOLOGY INC.

CARB MARINE EMISSIONS INVENTORY
DATA EDIT LISTING 1976 EMISSIONS SUMMARY BY AREA6 BY SOURCE -LIGHTERING

DATE 10/01/80
PAGE 0001

A/S CODE	POUNDS POLLUTANTS THC	CO	NOX	SOX	PART	POUNDS REACTIVE HC CLASS 1	CLASS 2	CLASS 3
B-V	179,925	0	0	0	0	25,191	154,736	0
L-E	3,506	10,405	185,259	1,024,120	75,122	1,299	679	1,529
L-P	497	1,491	27,835	156,072	11,434	191	92	203
P-V	1,184,147	0	0	0	0	165,404	1,018,368	380
AREA TOTALS	1,368,075	11,896	213,094	1,180,192	86,556	192,085	1,173,875	2,112
~~GRAND TOTALS~~	~~1,368,075~~	~~11,896~~	~~213,094~~	~~1,180,192~~	~~86,556~~	~~192,085~~	~~1,173,875~~	~~2,112~~

#2581-01-0681

@10350

@10350

TABLE 3.18a (continued)

S C O T T E N V I R O N M E N T A L T E C H N O L O G Y I N C.

CARB MARINE EMISSIONS INVENTORY
DATA EDIT LISTING 1976 EMISSIONS SUMMARY BY AREA1 BY SOURCE -LOS ANGELES

DATE 10/02/80
PAGE 0001

A/S CODE	POUNDS POLLUTANTS THC	CO	NOX	SOX	PART	POUNDS REACTIVE HC CLASS 1	CLASS 2	CLASS 3
A-E	86,333	259,016	776,951	6,776,708	496,382	20,325	18,796	47,246
B-E	11,112	33,323	99,935	871,633	63,840	3,126	2,346	5,639
B-P	263	21,238	257,867	952,591	69,767	73	4	73
B-V	1,254,069	0	0	0	0	150,207	1,080,266	23,605
F-P	35	2,348	28,528	105,385	7,718	13	10	13
F-V	216,912	0	0	0	0	30,382	186,552	0
H-E	52,032	133,209	730,638	1,240,634	112,040	7,502	11,501	32,184
M-M	34,383	87,390	444,112	67,476	47,276	4,470	8,252	21,661
M-S	5,531	20,478	55,046	12,840	8,232	719	1,328	3,485
M-T	24,396	45,506	394,102	41,682	27,724	3,172	5,856	15,370
P-E	22,164	66,469	199,409	1,739,151	127,407	7,212	4,502	10,513
P-P	188	18,340	222,744	822,856	60,265	2	0	2
P-V	2,135,271	0	0	0	0	200,169	1,855,185	79,925
AREA TOTALS	3,842,689	687,317	3,209,332	12,630,956	1,020,651	427,372	3,174,598	239,716
~~GRAND TOTALS~~	~~3,842,689~~	~~687,317~~	~~3,209,332~~	~~12,630,956~~	~~1,020,651~~	~~427,372~~	~~3,174,598~~	~~239,716~~

#2581-01-0681

TABLE 3.18a (continued)

S C O T T E N V I R O N M E N T A L T E C H N O L O G Y I N C.

CARB MARINE EMISSIONS INVENTORY
DATA EDIT LISTING 1976 EMISSIONS SUMMARY BY AREA4 BY SOURCE -MISC.COASTAL PORTS

DATE 10/02/80
PAGE 0001

A/S CODE	POUNDS POLLUTANTS THC	CO	NOX	SOX	PART	POUNDS REACTIVE HC CLASS 1	CLASS 2	CLASS 3
A-E	184	553	1,657	14,436	1,056	69	35	79
B-E	1,540	4,610	13,802	120,408	8,817	584	296	664
B-P	28	4,171	50,704	187,269	13,718	0	0	0
B-V	77,377	0	0	0	0	9,545	66,542	1,296
H-E	0	1	10	56	4	0	0	0
M-T	1,459	9,597	29,398	3,559	2,217	188	350	919
P-E	4,601	13,805	41,394	360,984	26,439	1,816	888	1,952
P-P	36	2,193	26,617	98,333	7,205	0	0	0
P-V	1,291,851	0	0	0	0	177,128	1,111,104	3,622
AREA TOTALS	1,377,076	34,930	163,582	785,045	59,456	189,330	1,179,215	8,532
~~GRAND TOTALS~~	~~1,377,076~~	~~34,930~~	~~163,582~~	~~785,045~~	~~59,456~~	~~189,330~~	~~1,179,215~~	~~8,532~~

#2581-01-0681

TABLE 3.18a (continued)

S C O T T E N V I R O N M E N T A L T E C H N O L O G Y I N C.

CARB MARINE EMISSIONS INVENTORY
DATA EDIT LISTING 1976 EMISSIONS SUMMARY BY AREA2 BY SOURCE -SAN FRANCISCO DATE 10/02/80
PAGE 0001

A/S CODE	POUNDS POLLUTANTS THC	CO	NOX	SOX	PART	POUNDS REACTIVE HC CLASS 1	CLASS 2	CLASS 3
A-E	68,444	205,320	615,956	5,372,344	393,519	20,727	14,019	33,754
A-P	8	23	68	592	43	1	2	5
B-E	9,276	27,834	83,455	727,861	53,307	3,059	1,870	4,376
B-P	180	16,889	204,988	757,292	55,469	0	0	0
B-V	1,296,212	0	0	0	0	176,916	1,116,733	2,565
D-E	0	0	0	0	0	0	0	0
F-P	2	351	4,282	15,820	1,158	0	0	0
F-V	36,531	0	0	0	0	5,119	31,416	0
H-E	52,659	135,299	783,402	1,559,606	135,072	7,111	11,846	31,850
M-M	75,751	192,534	978,453	79,286	104,158	9,848	18,180	47,723
M-S	63,775	162,095	797,190	834,392	87,691	8,291	15,306	40,178
M-T	27,738	196,035	607,048	65,965	42,285	3,606	6,657	17,475
P-E	22,603	67,776	203,295	1,773,119	129,886	7,766	4,503	10,372
P-P	134	13,277	161,128	595,215	43,599	0	0	0
P-V	3,427,660	0	0	0	0	311,643	2,938,232	177,826
AREA TOTALS	5,080,973	1,017,433	4,439,265	11,781,492	1,046,187	554,087	4,158,764	366,124

TABLE 3.19

SUMMARY OF EMISSIONS BY COUNTY

County	THC	CO	NO_x	SO_x	Part.
Alameda					
Berth	23,618	70,769	212,290	1,851,722	135,637
Inland Waters	18,405	57,311	260,589	266,814	34,201
Total	42,023	128,080	472,879	2,118,536	169,838
Contra Costa					
Berth	3,376,177	120,527	581,056	3,601,670	263,816
Inland Waters	48,313	150,443	684,046	700,388	89,775
Total	3,424,490	270,970	1,265,102	4,302,058	353,591
Los Angeles					
Berth	3,697,166	397,259	1,929,319	11,151,339	816,814
Port Waters	116,342	286,554	1,256,069	1,360,470	195,112
Lightering	1,368,075	11,896	213,094	1,180,192	86,556
Coastal Waters	194,404	597,109	3,113,511	5,279,016	485,732
Total	5,375,987	1,292,818	6,511,993	18,971,017	1,584,214
Marin					
Inland Waters	18,405	57,311	260,589	266,814	34,201
Total	18,405	57,311	260,589	266,814	34,201
Monterey					
Berth	22,417	4,493	26,756	110,287	8,330
Coastal Waters	101,806	336,932	1,797,150	3,428,091	306,092
Total	124,223	341,425	1,823,906	3,538,378	314,422
Orange					
Berth	29,181	3,504	23,944	119,147	8,725
Coastal Waters	153,595	460,271	2,380,707	3,664,675	355,390
Total	182,776	463,775	2,404,651	3,783,822	364,115
Sacramento					
Berth	2,630	7,879	23,627	206,093	15,098
Inland Waters	20,706	64,475	293,162	300,166	38,476
Total	23,336	72,354	316,789	506,259	53,574
San Diego					
In Port	283,975	697,292	3,510,663	930,446	394,615
Coastal Waters	114,516	318,243	1,583,272	700,465	183,344
Total	398,491	1,015,535	5,093,935	1,630,911	577,959

TABLE 3.19 - SUMMARY OF EMISSIONS BY COUNTY - Continued

County	THC	CO	NO_x	SO_x	Part.
San Francisco					
Berth	23,280	61,778	186,235	1,618,661	118,562
Bay Lightering	565,071	20,215	80,358	569,223	41,697
Inland Waters	98,927	308,050	1,400,665	1,434,127	183,828
Coastal Waters	57,013	185,946	992,970	1,877,864	168,011
Total	744,291	575,989	2,660,228	5,499,875	512,098
San Joaquin					
Berth	5,215	5,320	17,822	142,966	10,476
Inland Waters	6,902	21,492	97,721	100,055	12,825
Total	12,117	26,812	115,543	243,021	23,301
San Luis Obispo					
Berth	867,127	18,848	68,080	321,576	24,973
Coastal Waters	76,363	254,370	1,363,307	2,646,696	235,216
Total	943,490	273,218	1,431,387	2,968,272	260,189
San Mateo					
Berth	970	477	1,975	13,560	993
Coastal Waters	173,587	593,905	3,002,322	5,117,090	471,829
Total	174,557	594,382	3,004,297	5,130,650	472,822
Santa Barbara					
Berth	103,273	2,124	7,276	49,360	3,733
Coastal Waters	76,198	246,805	1,307,421	2,422,968	217,425
Total	179,471	248,929	1,314,697	2,472,328	221,158
Santa Cruz					
Coastal Waters	22,260	73,533	391,666	743,226	66,470
Total	22,260	73,533	391,666	743,226	66,470
Solano					
Berth	853,949	14,075	78,541	442,419	32,401
Inland Waters	18,405	57,311	260,589	266,814	34,201
Total	872,354	71,386	339,130	709,233	66,602
Ventura					
Berth	374,473	5,691	33,592	171,157	12,697
Coastal Waters	180,802	556,480	2,900,945	4,913,776	452,973
Total	555,275	562,171	2,934,537	5,084,933	465,670

3.4.4 Temperal Distribution

Emissions as a function of months were calculated for each of six areas within the study area. These six areas consist of the ports and areas described in Section 3.4.3, Spatial Distribution, and are listed below:

Area 1 - Los Angeles
Area 2 - San Francisco
Area 3 - San Diego
Area 4 - Miscellaneous Coastal Ports
Area 5 - Sea Lanes
Area 6 - Southern California Lightering

The distribution of emissions by month for each of the six areas is presented in Table 3.20. A further breakdown of each area by individual port and area is presented in Appendix B.

3.4.5 In-Transit Hydrocarbon Losses

Hydrocarbon vapors are emitted to the atmosphere from the tanks of ships transporting petroleum products while the ships are in transit from port to port. Very little work has been done to quantify the relationship between the quantity of hydrocarbon lost and the variables which influence it. These variables include product volatility, ambient temperature, diurnal temperature variations, tank locatin, ullage and others. AP-42 lists emission factors for various products in pounds per thousand gallons per week. Obviously, these factors are gross estimates, and their application under conditions existing off the California coast would be expected to yield rough approximations of hydrocarbon emissions.

In-transit emissions are a function of the quantity of product in a ship's tanks during a given trip. The computer programming needed to calculate the total of each product on each tanker trip in the 1976 Ship Activity file generated by Scott for this project was judged to be too complex to be practical to develop and apply. Therefore, it was decided to provide an estimate of the total in-transit emissions for the year from overall annual totals of products transported. It is believed that the emissions arrived at in this manner are as accurate as can be determined until more detailed emission factors become available.

TABLE 3.20

S C O T T E N V I R O N M E N T A L T E C H N O L O G Y I N C.

CARB MARINE EMISSIONS INVENTORY
DATA EDIT LISTING

1976 EMISSIONS SUMMARY BY AREA AND MONTH - AREA 1 - LA/LB/ES/HB

	POUNDS POLLUTANTS				
	THC	CO	NOX	SOX	PART
JAN TOTALS	335,544	62,880	297,292	1,105,363	90,923
FEB TOTALS	275,753	58,577	273,860	984,802	81,964
MAR TOTALS	375,790	61,740	297,775	1,054,947	87,420
APR TOTALS	322,037	57,432	276,863	927,355	78,038
MAY TOTALS	379,275	48,277	214,917	1,117,987	83,967
JUN TOTALS	351,343	60,345	287,698	1,022,979	84,935
JUL TOTALS	320,537	64,555	306,255	1,132,735	93,069
AUG TOTALS	294,101	60,958	291,049	1,042,303	86,353
SEP TOTALS	317,872	44,513	190,079	1,061,242	79,332
OCT TOTALS	308,227	61,188	290,101	1,050,493	86,903
NOV TOTALS	299,865	61,699	290,961	1,081,109	89,060
DEC TOTALS	262,345	45,153	192,482	1,049,641	78,687
GRAND TOTALS	3,842,689	687,317	3,209,332	12,630,956	1,020,651

Scott Environmental Technology Inc.

TABLE 3.20 continued

Scott Environmental Technology Inc.

S C O T T E N V I R O N M E N T A L T E C H N O L O G Y I N C.

#2581-G1-0681

CARB MARINE EMISSIONS INVENTORY
DATA EDIT LISTING

1976 EMISSIONS SUMMARY BY AREA AND MONTH - AREA 2 - SF PORTS

	POUNDS POLLUTANTS				
	THC	CO	NOX	SOX	PART
JAN TOTALS	378,454	105,981	453,632	1,150,710	104,169
FEB TOTALS	383,711	95,717	416,466	899,915	85,545
MAR TOTALS	442,725	99,344	434,054	978,338	91,503
APR TOTALS	399,070	92,209	403,933	840,167	80,945
MAY TOTALS	292,850	40,435	168,447	938,335	70,388
JUN TOTALS	431,533	99,435	432,731	991,715	92,393
JUL TOTALS	513,460	103,613	457,187	1,090,490	99,942
AUG TOTALS	452,210	103,531	449,816	1,076,988	98,877
SEP TOTALS	337,753	35,484	157,001	800,289	60,334
OCT TOTALS	413,687	103,300	454,043	1,087,302	99,559
NOV TOTALS	511,552	96,681	425,040	946,768	88,922
DEC TOTALS	523,968	41,703	186,915	980,475	73,610
GRAND TOTALS	5,080,973	1,017,433	4,439,265	11,781,492	1,046,187

TABLE 3.20 continued

SCOTT ENVIRONMENTAL TECHNOLOGY

CARB MARINE EMISSIONS INVENTORY
DATA EDIT LISTING

1976 EMISSIONS SUMMARY BY AREA AND MONTH - AREA 3 - SD

	POUNDS POLLUTANTS				
	THC	CO	NOX	SOX	PART
JAN TOTALS	30,552	76,815	386,127	83,443	42,373
FEB TOTALS	30,083	76,630	385,352	77,989	41,973
MAR TOTALS	30,487	76,899	386,295	85,094	42,501
APR TOTALS	29,965	76,504	385,214	75,134	41,765
MAY TOTALS	1,985	563	2,829	14,129	1,061
JUN TOTALS	29,742	76,731	385,662	80,805	42,181
JUL TOTALS	29,606	76,267	384,234	69,184	41,323
AUG TOTALS	30,385	78,014	389,674	114,034	44,621
SEP TOTALS	637	1,054	3,757	26,080	1,935
OCT TOTALS	30,415	76,637	385,565	75,405	41,801
NOV TOTALS	29,572	76,093	383,469	64,490	40,975
DEC TOTALS	760	1,311	4,607	31,994	2,383
GRAND TOTALS	274,189	693,518	3,482,785	797,781	384,892

Scott Environmental Technology Inc.

TABLE 3.20 continued

S C O T T E N V I R O N M E N T A L T E C H N O L O G Y I N C.

CARB MARINE EMISSIONS INVENTORY
DATA EDIT LISTING

1976 EMISSIONS SUMMARY BY AREA AND MONTH - AREA 4 - MISC COASTAL PORTS

	POUNDS POLLUTANTS				
	THC	CO	NOX	SOX	PART
JAN TOTALS	123,160	2,904	12,226	55,637	4,288
FEB TOTALS	108,067	2,629	11,005	47,624	3,702
MAR TOTALS	146,826	3,329	15,758	71,357	5,440
APR TOTALS	100,586	3,310	15,104	69,612	5,317
MAY TOTALS	116,604	2,323	11,800	70,547	5,165
JUN TOTALS	142,043	2,861	12,272	54,825	4,229
JUL TOTALS	89,387	2,919	12,640	57,185	4,405
AUG TOTALS	123,679	3,604	17,901	81,221	6,163
SEP TOTALS	88,946	1,851	10,561	58,680	4,296
OCT TOTALS	111,711	3,635	16,378	78,750	5,981
NOV TOTALS	113,905	3,179	15,113	67,037	5,123
DEC TOTALS	112,162	2,386	12,624	72,570	5,347
GRAND TOTALS	1,377,076	34,930	163,582	785,045	59,456

Scott Environmental Technology Inc

TABLE 3.20 continued

S C O T T E N V I R O N M E N T A L T E C H N O L O G Y

CARB MARINE EMISSIONS INVENTORY
DATA EDIT LISTING

1976 EMISSIONS SUMMARY BY AREA AND MONTH - AREA 5 - SEA LANES

	POUNDS POLLUTANTS				
	THC	CO	NOX	SOX	PART
JAN TOTALS	247,785	695,614	3,537,153	2,974,690	451,924
FEB TOTALS	76,345	256,164	1,297,556	2,213,575	203,602
MAR TOTALS	88,746	293,407	1,505,656	2,639,845	239,935
APR TOTALS	83,197	272,995	1,378,027	2,278,397	211,180
MAY TOTALS	82,260	242,915	1,341,316	2,631,368	226,850
JUN TOTALS	83,666	276,691	1,406,856	2,397,954	220,172
JUL TOTALS	90,739	298,787	1,533,673	2,681,406	243,852
AUG TOTALS	85,879	287,261	1,480,444	2,653,843	239,794
SEP TOTALS	67,620	205,302	1,154,880	2,422,922	205,536
OCT TOTALS	86,638	288,562	1,484,664	2,638,232	239,008
NOV TOTALS	81,203	274,822	1,417,114	2,570,393	231,771
DEC TOTALS	76,466	231,074	1,295,932	2,691,242	228,858
GRAND TOTALS	1,150,544	3,623,594	18,833,271	30,793,867	2,942,482

Scott Environmental Technology Inc.

TABLE 3.20 continued

S C O T T E N V I R O N M E N T A L T E C H N O L O G Y

CARB MARINE EMISSIONS INVENTORY
DATA EDIT LISTING 1976 EMISSIONS SUMMARY BY AREA AND MONTH - AREA 6 - SC LIGHTERING

	POUNDS POLLUTANTS				
	THC	CO	NOX	SOX	PART
JUL TOTALS	226,550	1,246	23,265	130,448	9,555
AUG TOTALS	221,216	2,062	38,521	215,996	15,823
SEP TOTALS	139,541	1,935	36,134	202,608	14,840
OCT TOTALS	231,114	1,887	35,204	197,395	14,459
NOV TOTALS	276,681	2,089	39,002	218,689	16,020
DEC TOTALS	272,973	2,677	40,968	215,056	15,859
GRAND TOTALS	1,368,075	11,896	213,094	1,180,192	86,556

Scott Environmental Technology Inc.

The in-transit hydrocarbon emission factors given in AP-42 for crude, gasoline and JP-4 are 3, 1 and 0.7 pounds per thousand gallons per week, respectively. Factors for the less volatile products are orders of magnitude less and so emissions from other products than crude, gasoline and JP-4 have been assumed to be negligible. In addition to the quantity of product being transported, it is necessary to know the period of time for an average trip within the waters of the study area. The time varies from six hours minimum to several days or more when a ship is at anchor during part of its trip. A sampling of a number of typical trips in the 1976 Ship Activity file provided estimates of an average trip time of 16 hours for crude transit and 12 hours for gasoline and JP-4 transit.

The hydrocarbon emissions from in-transit losses calculated by the above procedures are tabulated below:

IN-TRANSIT LOSSES OF HYDROCARBONS
FOR 1976 IN OVERALL STUDY AREA

Product	Emissions (Pounds)
Crude	2,023,849
Gasoline	595,845
JP-4	9,639
TOTAL	2,629,333

The total estimated in-transit emissions represent approximately 20% of the total hydrocarbons emitted by all other marine sources reported. It is further estimated that from 10% to 20% of the in-transit losses occur in inland waters (port, bay and anchorage areas) and the remainder in coastal sea lanes. Reactivity distributions for cargo transfer (crude, JP-4 and gasoline) were used in distributing in-transit emissions.

3.4.6 Temperal Variations

An analysis of emissions variation within each calendar month of the study period was conducted. The analysis was divided by hydrocarbon emissions associated with petroleum transfers and hydrocarbon, carbon monoxide, oxides of nitrogen, oxides of sulfur and particulate emissions associated with marine engine operations.

Petroleum Transfer Emissions - Presented in Tables 3-21a through 3-21f are monthly summaries of emissions associated with the transfer of petroleum and petroleum products for the total study area and applicable areas within the study area as follows:

Table 3-21a - Total Study Area

Table 3-21b - Area 1 - Los Angeles, including ports of Los Angeles, Long Beach, El Segundo and Huntington Beach.

Table 3-21c - Area 2 - San Francisco Area

Table 3-21d - Area 3 San Diego Area

Table 3-21e - Port of Long Beach

Table 3-21f - Port of Los Angeles

Presented in each table are summaries by month and, in addition, the high, low and average day for each month. Emissions presented include product transfer and ballasting. The Day Number (i.e., 29,43 etc.) listed represents the Julian Calendar day the high and low emission day occurred. Appendix C presents a conversion table from the Julian to Gregarian calendar.

Engine emissions - Presented in Tables 3-22a through 3-22f are monthly summaries of emission associated with vessel engine operation. Emission summaries by month and the high, low and average day for each month are presented by pollutant: 1 - Hydrocarbons, 2 - Carbon Monoxide, 3 - Oxides of Nitrogen, 4 - Oxides of Sulfur and 5 - Particulates for the following areas:

Table 3-22a1-5 Total Study Area

Table 3-22b1-5 Area 1-Los Angeles

Table 3-22c1-5 Area 2-San Francisco

Table 3-22d1-5 Port of Long Beach

Table 3-22e1-5 Port of Los Angeles

Table 3-22f1-5 California Coastal Waters

No summary is presented for San Diego since the majority of engine emissions in San Diego result from military operations and daily definition of these emissions was not available.

3.4.7 Petroleum and Petroleum Product Transfers

As previously discussed, in compiling the inventory conducted, an in-depth survey of petroleum and petroleum products transferred during the study period was conducted. Each transfer was documented by vessel, date, place, quantity loaded or unloaded, and the prior cargo if a loading occurred. Table 3.23 presents a summary of the total amounts (in barrels of crude oil, gasoline and other products) transferred within the study area during calendar year 1976.

TABLE 3-21a - PETROLEUM TRANSFER EMISSIONS - HYDROCARBONS - ALL AREAS

S C O T T E N V I R O N M E N T A L T E C H N O L O G Y I N C.

CARB MARINE EMISSIONS INVENTORY
DATA EDIT LISTING SUMMARY OF PETROLEUM TRANSFERS EMISSION: TOTAL HYDRO CARBONS-ALL AREAS

MONTH	POUNDS POLLUTANTS HC TOTAL	HIGH HC	DAY	LOW HC	DAY	AVERAGE HC
JAN	771,697	48,714	29	13,793	8	24,893
FEB	680,392	48,383	43	10,146	36	23,462
MAR	899,794	44,490	61	14,484	90	29,026
APR	823,797	58,783	92	8,951	112	27,460
MAY	704,075	37,635	152	6,193	139	22,712
JUN	910,111	47,578	168	12,711	170	30,337
JUL	1,097,998	63,091	199	15,975	197	35,419
AUG	1,017,230	52,184	239	13,606	231	32,814
SEP	867,418	46,244	251	12,379	262	28,914
OCT	1,019,551	55,134	299	16,090	305	32,889
NOV	1,146,103	68,861	326	16,353	306	38,203
DEC	1,165,621	53,280	353	20,690	366	37,601
TOTAL	11,103,787					30,338

Scott Environmental Technology Inc

TABLE 3-21b - PETROLEUM TRANSFER EMISSIONS - HYDROCARBONS - AREA 1

S C O T T E N V I R O N M E N T A L T E C H N O L O G Y I N C.

CARB MARINE EMISSIONS INVENTORY
DATA EDIT LISTING SUMMARY OF PETROLEUM TRANSFERS EMISSION: TOTAL HYDRO CARBONS - AREA 1

MONTH	POUNDS POLLUTANTS HC TOTAL	HIGH HC	DAY	LOW HC	DAY	AVERAGE HC
JAN	308,321	17,190	16	3,534	18	9,946
FEB	246,615	17,325	44	2,412	59	8,504
MAR	351,384	18,494	84	1,732	71	11,335
APR	313,444	20,857	109	3,443	100	10,448
MAY	334,383	22,559	152	2,683	131	10,787
JUN	353,655	19,874	177	2,453	164	11,789
JUL	298,380	18,939	189	2,142	205	9,625
AUG	277,135	18,014	221	1,500	235	8,940
SEP	294,778	21,467	271	2,674	265	9,826
OCT	300,199	20,618	280	2,756	298	9,684
NOV	270,821	26,680	313	2,282	306	9,027
DEC	255,296	18,616	341	3,319	366	8,235
TOTAL	3,604,411					9,848

Scott Environmental Technology Inc.

TABLE 3-21c - PETROLEUM TRANSFER EMISSIONS - HYDROCARBONS - AREA 2

SCOTT ENVIRONMENTAL TECHNOLOGY INC.

CARB MARINE EMISSIONS INVENTORY
DATA EDIT LISTING SUMMARY OF PETROLEUM TRANSFERS EMISSION: TOTAL HYDRO CARBONS - AREA 2

MONTH	POUNDS POLLUTANTS HC TOTAL	HIGH HC	DAY	LOW HC	DAY	AVERAGE HC
JAN	340,064	32,931	29	2,148	25	10,970
FEB	326,957	27,947	43	2,695	42	11,274
MAR	403,926	26,809	61	1,391	90	13,030
APR	406,830	43,859	92	994	112	13,561
MAY	264,031	21,528	130	1,489	139	8,517
JUN	409,055	22,599	156	1,858	172	13,635
JUL	478,937	33,290	193	5,160	201	15,450
AUG	421,681	25,880	223	2,145	216	13,603
SEP	331,846	28,962	255	4,273	262	11,062
OCT	375,387	27,603	299	4,095	290	12,109
NOV	476,939	26,715	324	3,069	312	15,898
DEC	524,831	30,855	354	4,126	358	16,930
TOTAL	4,760,484					13,007

Scott Environmental Technology Inc

TABLE 3-21d - PETROLEUM TRANSFER EMISSIONS - HYDROCARBONS - AREA 3

S C O T T E N V I R O N M E N T A L T E C H N O L O G Y I N C.

CARB MARINE EMISSIONS INVENTORY
DATA EDIT LISTING

SUMMARY OF PETROLEUM TRANSFERS EMISSION: TOTAL HYDRO CARBONS - AREA 3

MONTH	POUNDS POLLUTANTS HC TOTAL	HIGH HC	DAY	LOW HC	DAY	AVERAGE HC
JAN	798	118	16	8	31	26
FEB	379	68	52	9	60	13
MAR	247	67	91	6	90	8
APR	733	71	98	10	121	24
MAY	1,550	50	152	50	152	50
JUN	270	9	182	9	182	9
JUL	31	1	213	1	213	1
AUG	217	7	244	7	244	7
SEP	270	9	274	9	274	9
OCT	714	299	289	4	305	23
NOV	60	2	335	2	335	2
DEC	310	10	366	10	366	10
TOTAL	5,579					15

Scott Environmental Technology Inc

TABLE 3-21e - PETROLEUM TRANSFER EMISSIONS - HYDROCARBONS - PORT OF LONG BEACH

S C O T T E N V I R O N M E N T A L T E C H N O L O G Y I N C.

CARB MARINE EMISSIONS INVENTORY
DATA EDIT LISTING SUMMARY OF PETROLEUM TRANSFERS EMISSION: TOTAL HYDRO CARBONS-LB PORT

MONTH	POUNDS POLLUTANTS HC TOTAL	HIGH HC	DAY	LOW HC	DAY	AVERAGE HC
JAN	48,019	4,739	9	135	21	1,549
FEB	59,485	7,927	41	142	51	2,051
MAR	95,837	13,694	84	158	73	3,092
APR	116,136	12,258	105	469	100	3,871
MAY	69,655	6,518	127	151	146	2,247
JUN	79,405	6,126	160	161	182	2,647
JUL	62,894	6,561	201	166	204	2,029
AUG	65,983	8,715	221	159	231	2,128
SEP	62,093	4,993	252	150	261	2,070
OCT	89,986	6,236	292	156	278	2,903
NOV	104,955	15,000	313	150	308	3,499
DEC	51,683	5,493	349	141	366	1,667
TOTAL	906,131					2,476

Scott Environmental Technology Inc.

TABLE 3-21f - PETROLEUM TRANSFER EMISSIONS - HYDROCARBONS - PORT OF LOS ANGELES

S C O T T E N V I R O N M E N T A L T E C H N O L O G Y I N C.

CARB MARINE EMISSIONS INVENTORY
DATA EDIT LISTING

SUMMARY OF PETROLEUM TRANSFERS EMISSION: TOTAL HYDRO CARBONS-LA PORT

MONTH	POUNDS POLLUTANTS HC TOTAL	HIGH HC	DAY	LOW HC	DAY	AVERAGE HC
JAN	140,681	12,453	22	611	14	4,538
FEB	104,161	12,200	35	422	47	3,592
MAR	148,992	14,311	64	449	71	4,806
APR	119,086	14,668	109	532	101	3,970
MAY	162,025	9,679	135	2,250	127	5,227
JUN	143,476	9,893	167	734	165	4,783
JUL	172,468	12,495	183	858	191	5,563
AUG	124,810	8,430	242	448	238	4,026
SEP	155,249	17,274	271	413	266	5,175
OCT	142,395	11,183	301	481	297	4,593
NOV	119,160	10,458	335	990	321	3,972
DEC	141,714	8,805	343	1,115	347	4,571
TOTAL	1,674,217					4,574

Scott Environmental Technology Inc