APPENDIX E

Proposed Amendments to CP-207: Certification Procedure for
Enhanced Conventional (ECO) Nozzles and
Low Permeation Conventional Hoses for Use at
Gasoline Dispensing Facilities

This Page Intentionally Left Blank

CALIFORNIA
AIR RESOURCES BOARD

Vapor Recovery Certification Procedure

CP - 207

Certification Procedure for Enhanced Conventional (ECO) Nozzles and Low Permeation Conventional Hoses for Use at Gasoline Dispensing Facilities

Adopted: November 9, 2015
Amended: June 4, 2019
Amended: [Insert Amended Date]

[Note: Proposed text additions are underlined and proposed text deletions are indicated by ~~strikethrough~~. [Bracketed text] is not part of the proposed amendments.]

CP-207
TABLE OF CONTENTS

1. GENERAL INFORMATION, APPLICABILITY, AND OTHER REGULATORY REQUIREMENTS 1
1.1 Applicability 1
1.2 Requirements of Other State Agencies 1
1.3 Requirement to Comply with All Other Applicable Codes and Regulations 2

2. PERFORMANCE STANDARDS AND SPECIFICATIONS 2
2.1 Performance Standards 2
2.2 Performance Specifications 2
2.3 Additional or Amended Performance Standards or Performance Specifications 2

3. PERFORMANCE STANDARDS AND SPECIFICATIONS FOR ECO NOZZLES AND LOW PERMEATION HOSES 5
3.1 Spillage 5
3.2 Post-Fueling Drips 6
3.3 Liquid Retention 6
3.4 Insertion Interlock 6
3.5 Nozzle Criteria 6
3.6 Nozzle/Dispenser Compatibility ..... ~~12~~7
3.7 Hose Permeation ..... ~~12~~7
3.8 Connections and Fittings ..... ~~12~~7

4. CERTIFICATION OF ECO NOZZLES AND LOW PERMEATION HOSES ..... ~~17~~8

5. APPLICATION PROCESS FOR ECO NOZZLES ..... ~~17~~8
5.1 Description of ECO Nozzle and Associated Fueling Components ..... ~~19~~10
5.2 Compatibility ..... ~~20~~11
5.3 Reliability of the System ..... ~~20~~11
5.4 Installation, Operation, and Maintenance of the System ..... ~~20~~11
5.5 Evidence of Financial Responsibility ..... ~~21~~12
5.6 Warranty ..... ~~21~~12
5.7 Test Station ..... ~~21~~12
5.8 Challenge Modes and Test Protocols ..... ~~21~~12
5.9 Other Information ..... ~~21~~12

6. EVALUATION OF THE APPLICATION ..... ~~21~~12
6.1 Performance Standards and Specifications ..... ~~22~~13
6.2 Bench and Operational Testing Results ..... ~~22~~13
6.3 Evaluation of ECO Nozzle Design ..... ~~22~~13
6.4 Materials Specifications and Compatibility with Fuel Formulations ..... ~~22~~13
6.5 Installation, Operation and Maintenance Manuals ..... ~~22~~13
6.6 Challenge Mode Determination ..... ~~22~~13

7. CERTIFICATION TESTING of ECO Nozzles ..... ~~23~~14
7.1 Test Site for Field Testing of ECO Nozzles ..... ~~23~~14
7.2 Bench Testing of Components ..... ~~24~~15
7.3 Operational Test of at Least 180 Days ..... ~~24~~15
7.4 Equipment Defect and Challenge Mode Testing ..... ~~25~~16

8. ALTERNATE TEST PROCEDURES AND INSPECTION PROCEDURES ..... ~~25~~16
8.1 Alternate Test Procedures for Certification Testing ..... ~~25~~16
8.2 Request for Approval of Alternate Test Procedure ..... ~~26~~17
8.3 Response to Request ..... ~~26~~17
8.4 Testing of Alternate Test Procedures ..... ~~26~~17
8.5 Documentation of Alternate Test Procedures ..... ~~26~~17
8.6 Inspection Procedures ..... ~~27~~18

9. DOCUMENTATION OF CERTIFICATION ..... ~~27~~18
9.1 Executive Order ..... ~~27~~18
9.2 Summary of Certification Process ..... ~~27~~18

10. DURATION AND CONDITIONS OF CERTIFICATION ..... ~~28~~19
10.1 Duration of Certification ..... ~~28~~19
10.2 Certification Not Transferable ..... ~~28~~19
10.3 Financial Responsibility ..... ~~28~~19
10.4 Warranty ..... ~~28~~19
10.5 Installation, Operation and Maintenance ..... ~~29~~20
10.6 Identification of System Components ..... ~~30~~21
10.7 Compliance Enforcement ..... ~~30~~21
10.8 Revocation of Certifications ..... ~~31~~22

11. CERTIFICATION RENEWAL ..... ~~31~~22
11.1 Request for Renewal ..... ~~32~~23
11.2 Review Request ..... ~~33~~24
11.3 Evaluation of System Deficiencies ..... ~~33~~24
11.4 Letter of Intent ..... ~~34~~25
11.5 Renewal of Executive Order ..... ~~34~~25
11.6 Denial of Executive Order Renewal ..... ~~34~~25

12. AMENDMENTS TO EXECUTIVE ORDERS ..... ~~34~~25
12.1 Request for Amendment ..... ~~35~~26
12.2 Review of the Request ..... ~~35~~26
12.3 Testing ..... ~~36~~27
12.4 Letter of Intent ..... ~~36~~27
12.5 Issuance of Executive Order ..... ~~36~~27

13. REPLACEMENT OF COMPONENTS WITH A TERMINATED, REVOKED, SUPERSEDED OR EXPIRED CERTIFICATION ..... ~~37~~28
13.1 Component Meeting Standards and Specifications ..... ~~37~~28
13.2 Component Not Meeting Standards and Specifications ..... ~~37~~28
13.3 Component Not Certified and Not Meeting Standards and Specifications ..... ~~37~~28
13.4 Procedure for Approval of Replacement Components ..... ~~37~~28

14. REQUIREMENTS FOR, AND CERTIFICATION OF, LOW PERMEATION HOSES ..... ~~38~~29
14.1 Request for Certification ..... ~~38~~29
14.2 Hose Lengths ..... ~~39~~30
14.3 Identification of Certified Hose ..... ~~39~~30

LIST OF TABLES

Table	Title	Page
2-1	Effective and Operative Dates for ECO Nozzle and Low Permeation Conventional Hose Performance Standards and Specifications	4
3-1	ECO Nozzle and Low Permeation Hose Standards and Specifications	5
~~3-2~~	~~ECO Nozzle Spout and Insertion Interlock Dimensions~~	~~7~~
5-1	Estimated Timeline for the Certification Application Process	~~19~~10
11-1	Estimated Timeline for the Renewal Process	~~33~~24

~~LIST OF FIGURES~~

~~Figure~~	~~Title~~	~~Page~~
~~3A~~	~~ECO Nozzle Spout Dimensions as Specified by Table 3-2~~	~~9~~
~~3B~~	~~ECO Nozzle Insertion Interlock Dimensions as Specified by Table 3-2~~	~~10~~
~~3C~~	~~Fill Pipe Access Zone for Comparison to Nozzles with Spout Angles Outside of the Range Specified in Table 3-2 (S_α of 19.5° to 26.0°)~~	~~13~~
~~3D~~	~~Fill Pipe Access Zone for Comparison to Nozzles with Spout Angles Outside of the Range Specified in Table 3-2 (S_α of 19.5° to 26.0°)~~	~~14~~
~~3E~~	~~Fill Pipe Latching Templates for Comparison to Nozzles with Spout Angles Outside of the Range Specified in Table 3-2 (S_α of 19.5° to 26.0°)~~	~~15~~
~~3F~~	~~Zone Placement for Vehicle Usage for Comparison to Nozzles with Spout Angles Outside of the Range Specified in Table 3-2 (S_α of 19.5° to 26.0°)~~	~~16~~
~~3G~~	~~Nozzle Vehicle Clearance for Comparison to Nozzles with Spout Angles Outside of the Range Specified in Table 3-2 (S_α of 19.5° to 26.0°)~~	~~16~~

California Environmental Protection Agency
California Air Resources Board

Vapor Recovery Certification Procedure

CP-207

Certification Procedure for Enhanced Conventional (ECO) Nozzles and Low Permeation Conventional Hoses for Use at Gasoline Dispensing Facilities

A set of definitions common to all Certification and Test Procedures are in:

D-200 Definitions for Vapor Recovery Procedures

All section references are to the Health and Safety Code unless otherwise stated.

1. GENERAL INFORMATION, APPLICABILITY, AND OTHER REGULATORY REQUIREMENTS

This procedure is adopted pursuant to Section 41954 of the California Health and Safety Code (CH&SC) to improve compatibility with fill pipe dimensional requirements and to prevent excessive liquid gasoline spillage and hose permeation during refueling operations at gasoline dispensing facilities (GDF). This document describes the procedure for evaluating and certifying enhanced conventional (ECO) nozzles and low permeation conventional hoses for use exclusively at GDFs where Phase II vapor recovery systems are not required by CARB or district regulations and fueling vehicles equipped with onboard refueling vapor recovery (ORVR) systems. A CARB Executive Order certifying the ECO nozzle or low permeation conventional hose shall be issued by the Executive Officer only after all of the applicable certification requirements have been successfully completed.

1.1 Applicability

CARB certified ECO nozzles and low permeation conventional hoses are required at ORVR Fleet Facilities as defined in D-200 *Definitions for Vapor Recovery Procedures*.

1.2 Requirements of Other State Agencies

As required pursuant to Sections 25290.1.2, 41955 and 41957, the Executive Officer shall coordinate this certification procedure with:

1.2.1 Department of Food and Agriculture,
Division of Measurement Standards (DMS)

1.2.2 Department of Forestry and Fire Protection,
Office of the State Fire Marshall (SFM)

1.2.3 Department of Industrial Relations,
Division of Occupational Safety and Health (DOSH)

1.2.4 State Water Resources Control Board (SWRCB)
Division of Water Quality

Prior to certification of the ECO Nozzles and low permeation hoses by the Executive Officer, the applicant shall submit plans and specifications for the components to each of these agencies. Certification testing by these agencies may be conducted concurrently with CARB certification testing; however, the approval of the SFM, DMS, DOSH, and a determination by the SWRCB shall be a precondition to certification by CARB. The applicant is responsible for providing documentation of these approvals and determinations to CARB.

1.3 Requirement to Comply with All Other Applicable Codes and Regulations

Certification of components by the Executive Officer does not exempt compliance with other applicable federal, state and local codes and regulations.

2. PERFORMANCE STANDARDS AND SPECIFICATIONS

2.1 Performance Standards

A performance standard defines the minimum performance requirements for certification of any system, including associated components. An applicant may request certification to a performance standard that is more stringent than the minimum performance standard specified in CP-207. Ongoing compliance with all applicable performance standards, including any more stringent standards requested by the applicant, shall be demonstrated throughout certification testing.

2.2 Performance Specifications

A performance specification is an engineering requirement that relates to the proper operation of a specific system or component thereof. In addition to the performance specifications mandated in CP-207, an applicant may specify additional performance specifications for a component. An applicant may request certification to a performance specification that is more stringent than the minimum performance specification in CP-207. Ongoing compliance with all applicable performance specifications, including any more stringent specifications requested by the applicant, shall be demonstrated throughout certification testing.

2.3 Additional or Amended Performance Standards or Performance Specifications

Whenever this Certification Procedure is amended to include additional or amended performance standards ~~or specifications~~, any ECO Nozzle or low permeation conventional hose certified as of the effective date of additional or amended performance standards ~~or specifications~~, shall remain certified until the operative date. ECO Nozzles or low permeation conventional hoses installed before the operative date of additional or amended standards may remain in use for the remainder of their useful life or for up to four years after the effective date of the new standard, whichever is shorter, provided the requirements of section 13 are met.

Whenever this Certification Procedure is amended to include additional or amended performance specifications, ECO Nozzles or low permeation conventional hoses shall remain certified until the Executive Order expiration date. ECO Nozzles or low permeation conventional hoses that were installed before the operative date of additional or amended performance specifications may remain in use subject to the requirements of section 11.

2.3.1 The effective and operative dates of the adoption for all performance standards and specifications contained herein are specified in Table 2-1

2.3.2 The operative dates of performance standards shall be the effective date of adoption of amended or additional performance standards, except as otherwise specified in Table 2-1. Certifications shall terminate on the operative date of amended or additional performance standards unless the Executive Officer determines that the ECO Nozzle or low permeation conventional hose meets the amended or additional performance standards. Upon the operative date of amended or additional performance standards, only ECO Nozzles or low permeation conventional hoses complying with the amended or additional performance standards may be installed.

2.3.3 The operative dates of performance specifications are listed in Table 2-1. As of the operative date of amended or additional performance specifications, only ECO Nozzles or low permeation conventional hoses complying with the amended or additional performance specifications may be installed.

2.3.4 When the Executive Officer determines that no ECO Nozzles or low permeation conventional hoses have been certified or will not be commercially available by the operative dates specified in Table 2-1, the Executive Officer shall extend the operative date and may extend the effective date of amended or additional performance standards or specifications. If there is only one certified ECO Nozzle or low permeation conventional hose to meet amended or additional standards, that ECO nozzle or low permeation conventional hose is considered to be commercially available if the ECO Nozzle or low permeation conventional hose can be shipped within eight weeks of the receipt of an order by the equipment manufacturer.

2.3.5 Existing gasoline dispensing facilities that operate on or before the effective date shall not be required to replace their ECO Nozzles to comply with the requirements of subsection 3.5.2 until the nozzle's end of ~~the~~ useful ~~nozzle~~ life. All replacement nozzles must comply with the requirements of subsection 3.5.2.

Table 2-1
Effective and Operative Dates for ECO Nozzle and Low Permeation Conventional Hose Performance Standards and Specifications

Performance Type	Requirement	Sec.	Effective Date	Operative Date
Low Permeation Conventional Hose	Permeation rate ≤ 10.0 gr/m^2/day as determined by UL330 (7th ed.)	14	June 10, 2014	June 10, 2014
Spillage (including drips from spout)	≤ 0.~~24~~05 pounds/1,000 gallons	3.1	Date when first applicable ECO Nozzle is certified	Date when first applicable ECO Nozzle is certified
Nozzle Criteria	Post-Refueling Drips ≤ 3 drops/refueling	3.2	~~Date when first applicable ECO Nozzle is certified~~March 1, 2019	~~Date when first applicable ECO Nozzle is certified~~March 1, 2019
Liquid Retention	≤ 100 ml/1,000 galls	3.3	~~Date when first applicable ECO Nozzle is certified~~March 1, 2019	~~Date when first applicable ECO Nozzle is certified~~March 1, 2019
Nozzle Spitting	≤ 1.0 ml/nozzle/fueling	3.3	~~Date when first applicable ECO Nozzle is certified~~March 1, 2019	~~Date when first applicable ECO Nozzle is certified~~March 1, 2019
Insertion Interlock	As specified in section 3.4	3.4	~~Date when first applicable ECO Nozzle is certified~~March 1, 2019	~~Date when first applicable ECO Nozzle is certified~~March 1, 2019
Nozzle Spout Assembly Dimensions Including Insertion Interlock	As specified in section 3.5.2 ~~and Table 3-2~~	3.5	Date when first ECO Nozzle meeting the spout and bellows dimensional specifications is certified	Date when first ECO Nozzle meeting the spout and bellows dimensional specifications is certified

3. PERFORMANCE STANDARDS AND SPECIFICATIONS FOR ECO NOZZLES AND LOW PERMEATION HOSES

Table 3-1 summarizes the Performance Standards and Specifications applicable to all ECO Nozzles and low permeation hoses. ECO Nozzles shall be certified only in facilities equipped with a certified Phase I system.

Table 3-1
ECO Nozzle and Low Permeation Hose Standards and Specifications

Performance Type	Requirement	Sec.	Std. Spec.	Test Procedure
Spillage Including Drips from Spout	≤ 0.~~12~~05 pounds/1,000 gallons	3.1	Std.	TP-201.2C
Post-Fueling Drips	≤ 3 Drops/Refueling	3.2	Spec.	TP-201.2D
Liquid Retention Nozzle "Spitting"	≤ 100 ml/1,000 gallons ≤ 1.0 ml per nozzle per test	3.3	Std.	TP-201.2E and Eng. Eval
Insertion Interlock	Verification of No Liquid Flow Prior to Interlock Mechanism Compression	3.4	Spec.	Testing and Eng. Eval.
Nozzle Spout and Insertion Interlock Dimensions:	Comply with dimensions specified in section 3.5.2.	3.5	Spec.	Direct Measurement
Nozzle/Dispenser Compatibility	Hold-open Latch Disengaged When Hung	3.6	Spec.	Testing and Eng. Eval.
Hose Permeation	≤ 10.0 g/m^2/day as Determined by UL 330 (7th ed)	3.7 and 14	Std.	UL 330 (7th ed)
Connectors and Fittings	No Indication of Liquid Leaks	3.8	Spec.	Visual

3.1 Spillage

The Executive Officer shall not certify gasoline dispensing equipment that causes excessive spillage.

3.1.1 Spillage shall be determined in accordance with TP-201.2C (Spillage from Phase II Systems). The emission factor for spillage shall not exceed 0.~~12~~05 pounds/1000 gallons dispensed, for each of the following three categories:

All refueling events;
Refueling operations terminated before activation of the primary shutoff; and
Refueling events terminated by activation of the primary shutoff.

3.1.2 The number of self-service refueling operations observed during certification testing of any system for spillage shall be not less than:

400 refueling operations [not including topoffs]; and
160 fill-ups [terminated by full tank shut-off, not including topoffs].

3.1.3 Increased spillage resulting from one top-off following the first activation of the automatic (primary) shutoff mechanism shall be subjected to challenge mode testing. Nozzles that result in excessive spillage following one top off shall not be certified.

3.2 Post-Fueling Drips

3.2.1 Each ECO Nozzle shall be "dripless," meaning that no more than three drops shall occur following each refueling operation. This shall be determined in accordance with TP-201.2D (Post-Fueling Drips from Nozzles).

3.2.2 A minimum of 4 nozzles must be tested for determination of post fueling drips.

3.3 Liquid Retention

3.3.1 Liquid retention in the nozzle shall not exceed 100 ml per 1,000 gallons. This shall be determined in accordance with TP-201.2E (Gasoline Liquid Retention in Nozzles and Hoses.

3.3.2 Nozzle "spitting" shall not exceed 1.0 ml per nozzle per test and shall be determined in accordance with TP-201.2E (Gasoline Liquid Retention in Nozzles and Hoses).

3.3.3 The number of refueling operations observed during certification testing of any system for liquid retention and spitting shall be not less than:

10 refueling operations per nozzle (not including topoffs); and
4 fill-ups (terminated by automatic shut-off, not including topoffs).

3.3.4 A minimum of 4 nozzles must be tested for determination of liquid retention and spitting.

3.4 Insertion Interlock

Each ECO Nozzle shall have an insertion interlock designed to prevent the dispensing of fuel unless there is an indication that the nozzle is engaged in the fillpipe (i.e., the insertion interlock mechanism is compressed). The performance specifications for the insertion interlock mechanism shall be established during the certification process.

3.5 Nozzle Criteria

3.5.1 Each ECO Nozzle shall be capable of refueling any vehicle that complies with the fillpipe specifications by reference in Cal. Code Regs., title 13, §2235.

3.5.2 Each ECO Nozzle shall comply with the spout and insertion interlock dimensions specified in ~~Table 3-2~~ Table 3 (page 10), Figure 2 (page 16), and Figure 4 (page 17) of SAE J285 (Rev APR2019).

~~Table 3-2~~
~~ECO Nozzle Spout and Insertion Interlock Dimensions~~

~~(Figures 3A and 3B illustrate the nozzle and insertion interlock dimensions.)~~

~~Symbol~~	~~Description~~	~~Dimension Range (Minimum/Maximum)~~
~~D_1~~	~~Spout Outside Diameter~~ ~~Minimum Length of D_1~~ ~~Roundness of D_1~~	~~20.50/21.34 mm (0.807/0.840 in)~~ ~~$L_2 - A_1$~~ ~~Within diameter limits~~
~~D_2 [(a)]~~	~~Nozzle Anchor Device Outside Diameter [(a)]~~	~~25.1/32.1 mm. (0.988/1.264 in) [(a)]~~
~~C_t~~	~~Spout Tip Chamfer or Radius~~	~~2.0 mm max (0.080 in max)~~
~~C_α~~	~~Spout Tip Chamfer Angle~~	~~30° to 45°~~
~~A_r~~	~~Anchor Radius~~	~~1.5 mm max (0.059 in max)~~
~~A_α~~	~~Anchor minimum angle~~	~~45°~~
~~A_1~~	~~Overall Length of Anchor~~	~~6.5/20.2 mm (0.256/0.795 in)~~
~~A_2~~	~~Length of Anchor without Chamfer~~	~~12.5 mm max (0.500 in max)~~
~~A_H [(b)]~~	~~Anchor Latch Height [(b)]~~	~~Minimum: 0.88 mm (0.035 in)~~ ~~Maximum constrained by D_2 [(b)]~~
~~S_α [(c)]~~	~~Bend Angle of Nozzle Spout [(c)]~~	~~19.5° / 26.0° [(c)]~~
~~L_1~~	~~Length of Straight Part of Nozzle Spout~~	~~L_2 + 5.0 mm min~~ ~~(L_2 + 0.197 in min)~~
~~L_2~~	~~Distance Between Nozzle End and First Anchor Position~~	~~85.0/95.0 mm (3.346/3.740 in)~~
~~L_3 [(d)]~~	~~Distance Between Nozzle End and Aspirator Port Centerline [(d)] *(Aspirator can be in front face of tip)*~~	~~18.0 mm max (0.709 in max) [(d)]~~
~~L_4~~	~~Clearance from Fuel Dispensing End to Spout Connection to Nozzle Body~~	~~150 mm min (5.906 in min)~~
~~B_1~~	~~Insertion Interlock Face Outer Diameter~~	~~77 mm max (3.031 in max)~~
~~P [(e)]~~	~~Aspirator Port Diameter [(e)]~~	~~2.00/4.25 mm (0.079/0.167 in) [(e)]~~

~~(a) If an offset anchor is utilized, anchor outside diameter measurement will be the effective length (greatest length) across the anchor surface.~~

~~(b) Measurement of anchor latch height (A_H) taken from anchor largest diameter to spout diameter.~~

~~(c) If spout bend angle (S_a) is out of the recommended range, the nozzle spout assembly and body must be able to be inserted within the vehicle fill pipe access zone defined in Section 3.5.3.~~

~~(d) If L_3 is greater than 18.0 mm (0.709 in) the distance difference between L_2 and L_3 must be greater than 69 mm (2.72 in), and L_3 can be no greater than 25.4 mm (1.000 in).~~

~~(e) Reference only dimension. Aspirator (sensor) placement can be in spout end or along bottom of spout.~~

~~This space intentionally left blank.~~

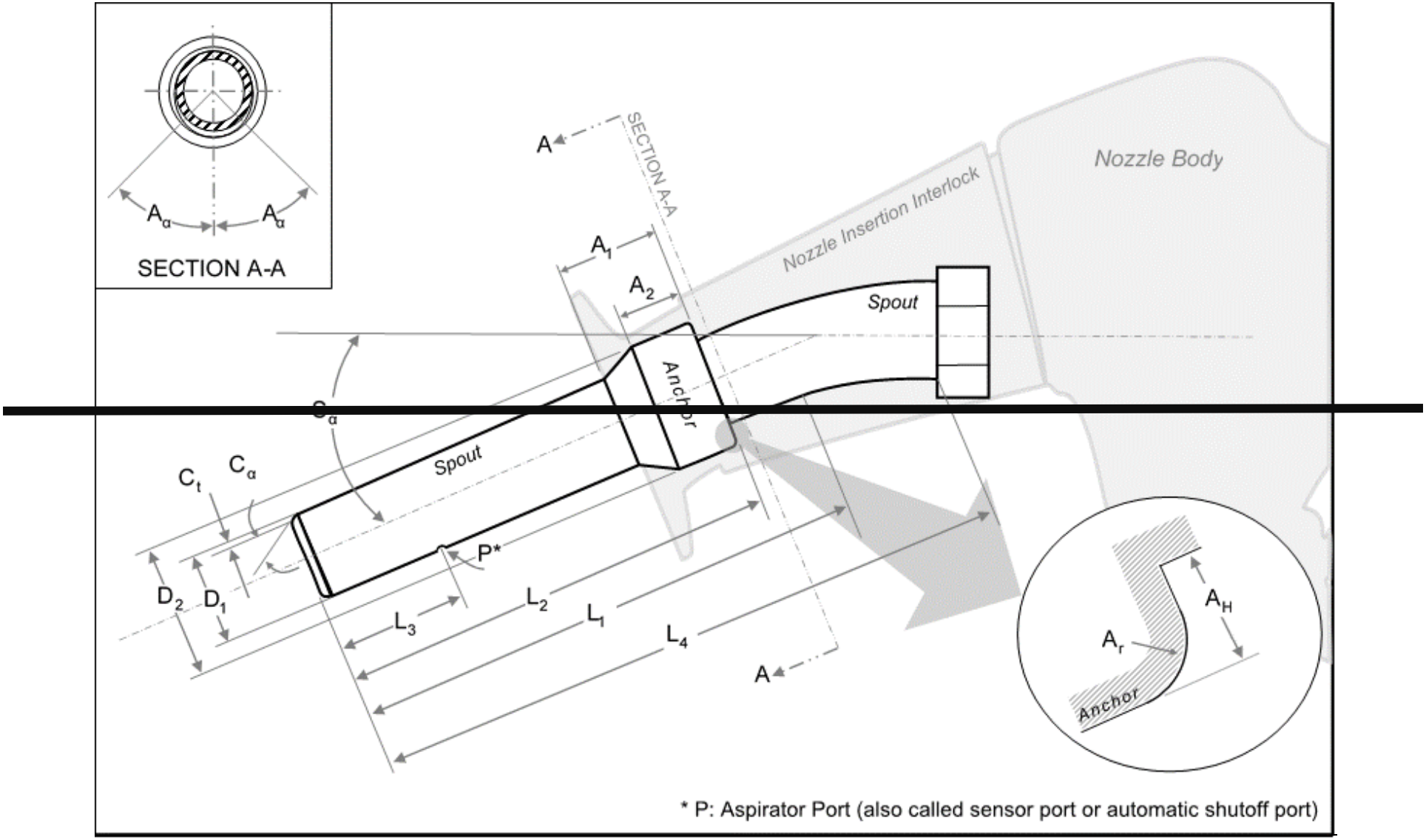

~~Figure 3A~~
~~ECO Nozzle Spout Dimensions as Specified by Table 3-2~~

~~**Figure 3B**~~
~~**ECO Nozzle Insertion Interlock Dimensions as Specified by Table 3-2**~~

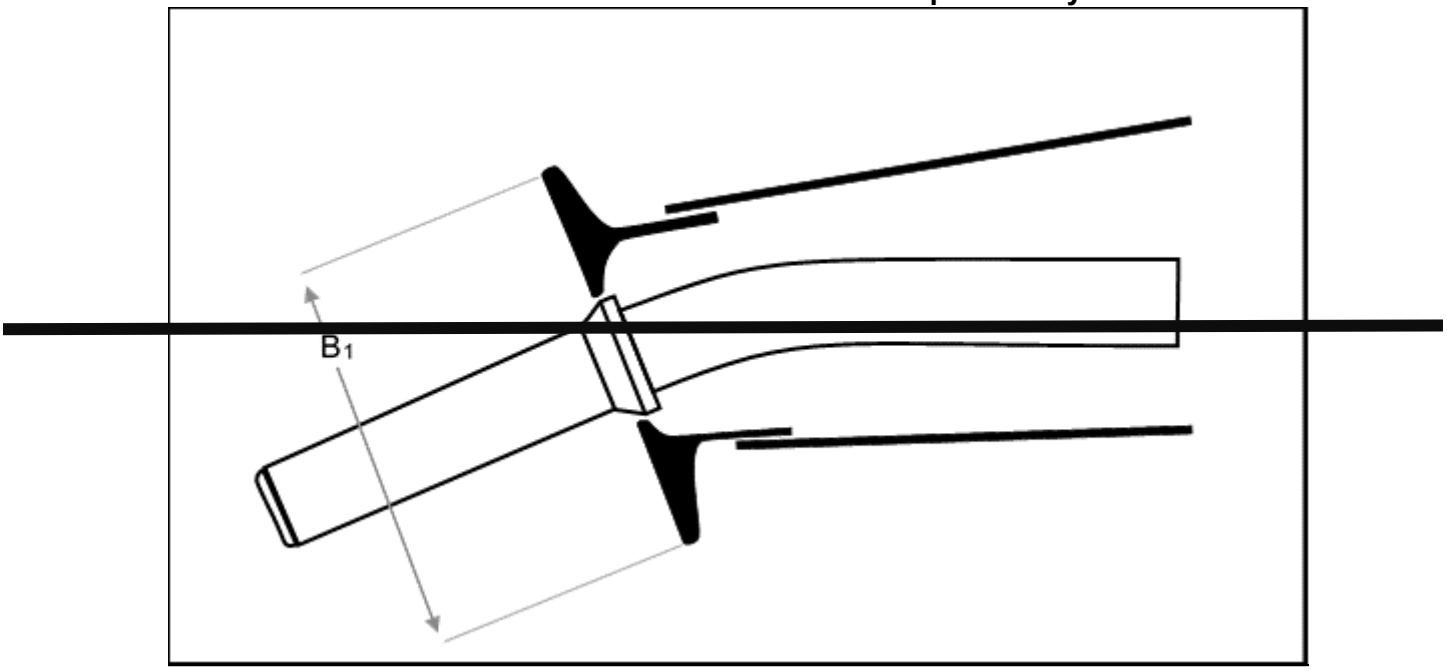

3.5.3 If an ECO nozzle spout's bend angle is outside of the range specified in ~~Table 3-2~~ Table 3 (page 10) of SAE J285 (Rev APR2019) (S_α of 19.5° to 26.0°), the nozzle spout assembly and body must be able to be inserted within the vehicle fill pipe access zone defined by Method 3, Section 3.10 (pages 10-13) and Figure 1 (Method 3, page 3), Figure 7 (page 10), Figure 8 (page 11), Figure 9 (page 12), and Figure 10 (page 13) of SAE J1140 (Rev OCT2019)~~the following geometries~~.

~~(a) Zone construction of fill pipe access zone (Figure 3C).~~

~~(b) A fill pipe face that is flat within 0.25 mm profile tolerance and has a smooth surface against which an ECO nozzle insertion interlock can make contact.~~

~~(c) The fill pipe and all surrounding bumpers, body parts, and factory-installed accessories designed and fabricated so that the fill pipe access zone allows for insertion of an ECO nozzle in at least one orientation within ±15 degrees swing of the upright or vertical position. It is recommended that the zone be based on the vertical since this is the primary customer filling position.~~

~~(d) Allowance must be made for production tolerances as these are not included in the access zone.~~

~~(e) The access zone consists of three parts as follows:~~

~~(1) An insertion interlock interface zone with a fixed circular shaped cross section that is fixed relative to the sealing surface of the fill pipe and designed to accommodate the sealing portion of an ECO nozzle. Additional clearance for the ECO nozzle is prescribed per Figure 3D from the seal surface of the nozzle and pipe, a clearance inward of the pipe to a depth of 12 mm along a 40° cone to the seal surface of the fill pipe.~~

~~(2) A nozzle swing zone with a rectangular cross-section tapered at the bottom that accommodates the handle portion of a nozzle. This zone is the portion shown on Figure 3C, within the lines defined by points C, D, E, F, and G.~~

~~(3) A transition zone consisting of a smooth blend from the rectangular nozzle swing zone to the circular insertion interlock zone. The top of this transition zone is the line G-H in Figure 3C and the bottom of this zone is Line A-C.~~

~~(f) Zone construction of fill pipe latching templates (Figure 3E). The templates shown in Figure 3E are for usage with nozzle insertion clearance review. There are nozzle resting and nozzle insertion position templates.~~

~~(1) The nozzle resting position template simulates a vehicle fill pipe with a minimum height locking lip, minimum depth locking lip, and a centered pipe expansion. A cross-section and face view are shown with appropriate dimensions to simulate the worst case lower handle position when the nozzle anchor is placed into the latched position and nozzle spout end is installed into the centered expansion inner diameter.~~

~~(2) The nozzle insertion position template simulates a vehicle fill pipe with a maximum height locking lip, maximum latching lip depth and a maximum pipe inner diameter. A cross-section and face view are shown with appropriate dimensions to simulate the worst case upper nozzle swing position when the nozzle anchor is resting on the latching lip and nozzle spout end contacts fill pipe interior diameter.~~

~~(g) Zone placement (Figures 3F and 3G).~~

~~(1) For usage in vehicle clearance, align the centerline of the insertion interlock interface zone with the centerline of the fill pipe sealing surface. See Figure 3F for example.~~

~~(2) For usage with nozzle insertion clearance, the following steps apply:~~

~~(i) Align the centerline of the insertion interlock interface zone with the centerline of the nozzle resting position template.~~

~~(ii) Superimpose the nozzle design into the model, positioning the nozzle spout into a resting position as shown in Figure 3G. No sections of nozzle can encroach the boundaries of the zone. Design should be reviewed with insertion interlock compressed to seal surface of template.~~

~~(iii) Align the centerline of the insertion interlock interface zone with the centerline of the nozzle insertion position template.~~

~~(iv) Superimpose the nozzle design into the model, positioning the nozzle spout into an insertion position as shown in Figure 3G. No sections of nozzle can encroach the boundaries of the zone. Design should be reviewed with ECO nozzle insertion interlock compressed to seal surface of template.~~

3.6 Nozzle/Dispenser Compatibility

The nozzle and dispenser shall be designed such that the interlock is not engaged when hung on the dispenser.

3.7 Hose Permeation

All hoses which carry liquid fuel against the outermost hose wall shall permeate at a rate of no more than 10.0 grams per square meters per day ($g/m^2/day$) as determined by UL 330 (7th ed) - Underwriters Laboratories' Standard for Hose and Hose Assemblies for Dispensing Flammable Liquids. The UL 330 (7th ed.) testing results shall comprise all of the certification testing for certification as a low permeation hose.

3.8 Connections and Fittings

All ECO nozzles and low permeation hose connections shall not leak. The absence of liquid leaks may be verified by visual inspection for seepage or drips.

~~Figure 3C~~

~~Fill Pipe Access Zone for Comparison to Nozzles with Spout Angles Outside of the Range Specified in Table 3-2 (S_α of 19.5° to 26.0°)~~

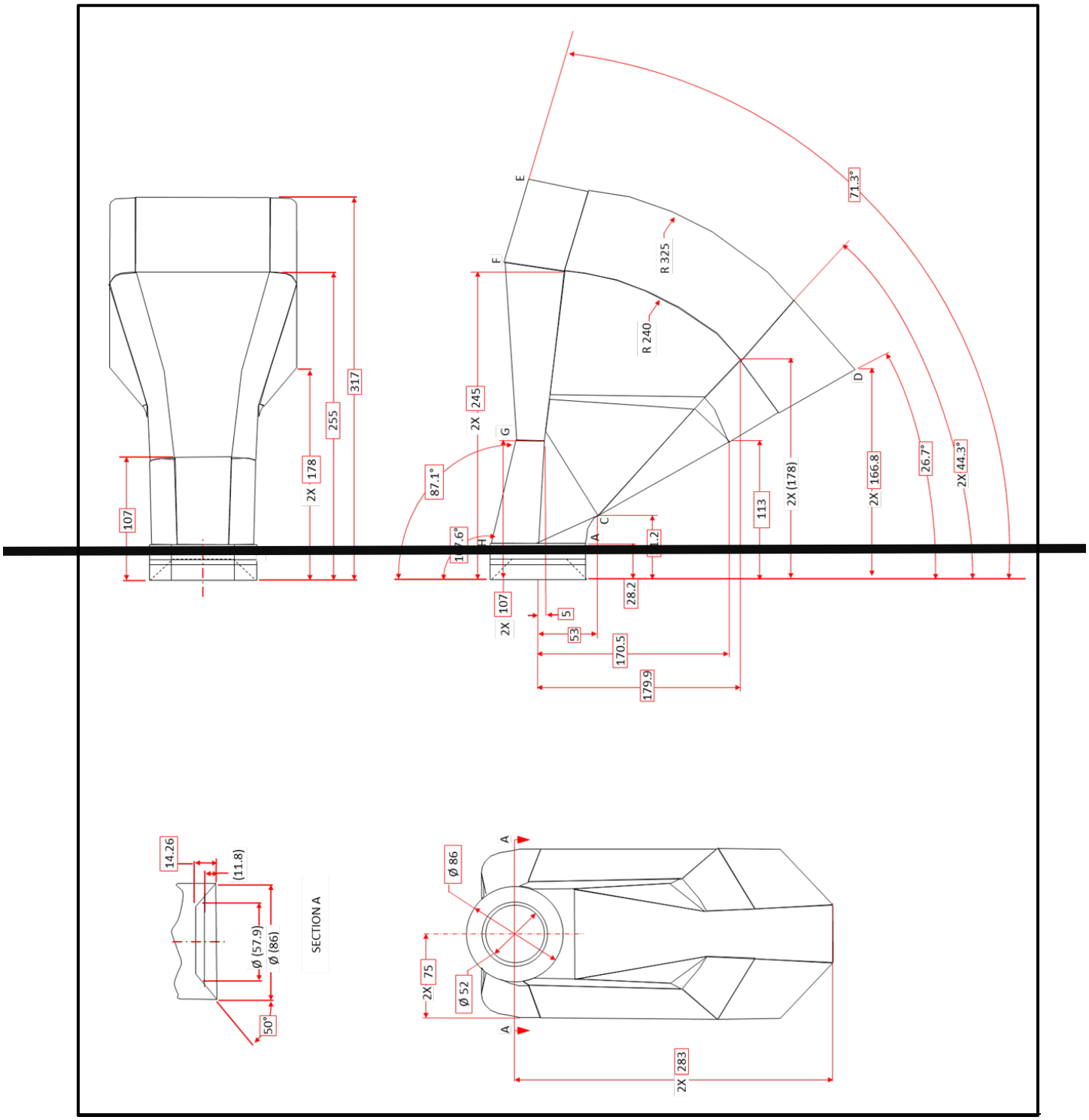

~~Figure 3D~~

~~Fill Pipe Access Zone for Comparison to Nozzles with Spout Angles Outside of the Range Specified in Table 3-2 (S_α of 19.5° to 26.0°)~~

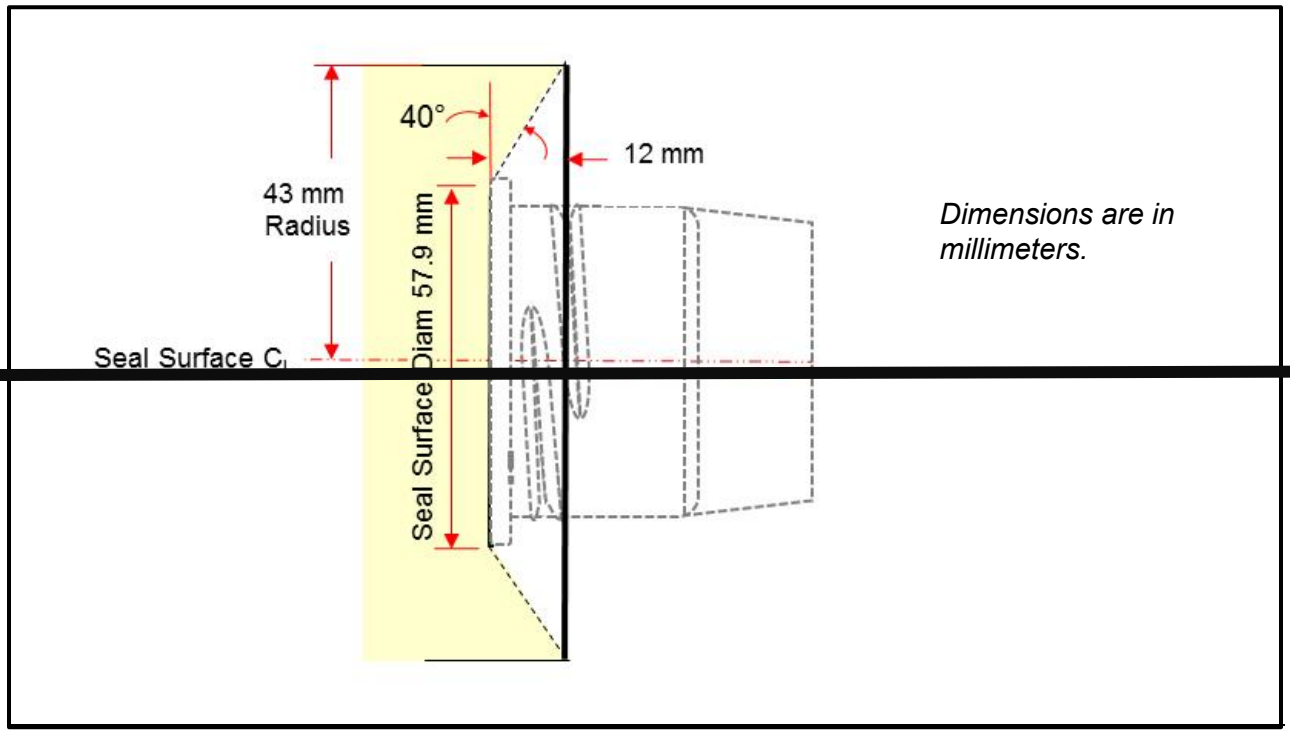

~~Figure 3E~~

~~Fill Pipe Latching Templates for Comparison to Nozzles with Spout Angles Outside of the Range Specified in Table 3-2 (S_α of 19.5° to 26.0°)~~

A. Nozzle Resting Position Template

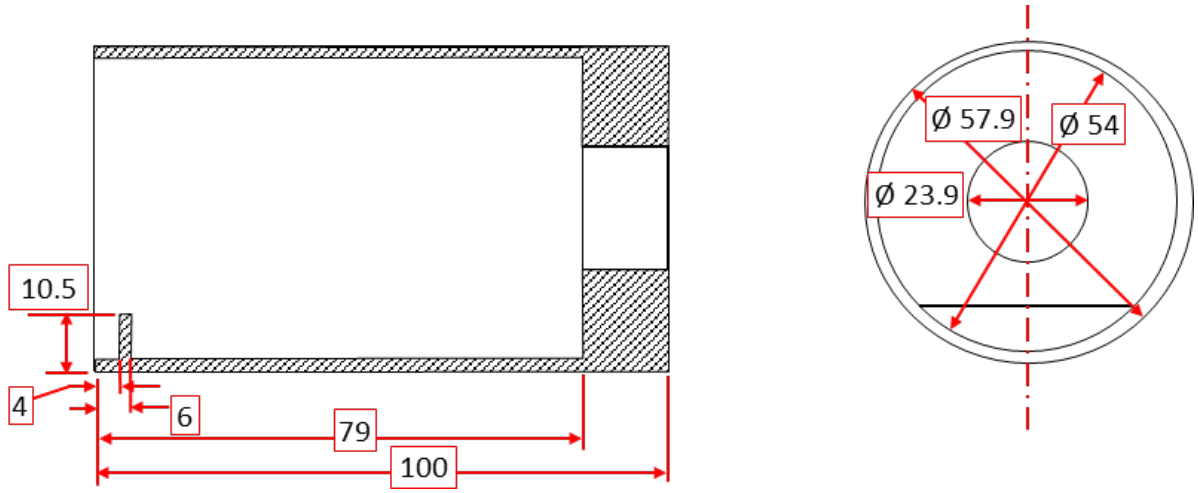

B. Nozzle Insertion Position Template

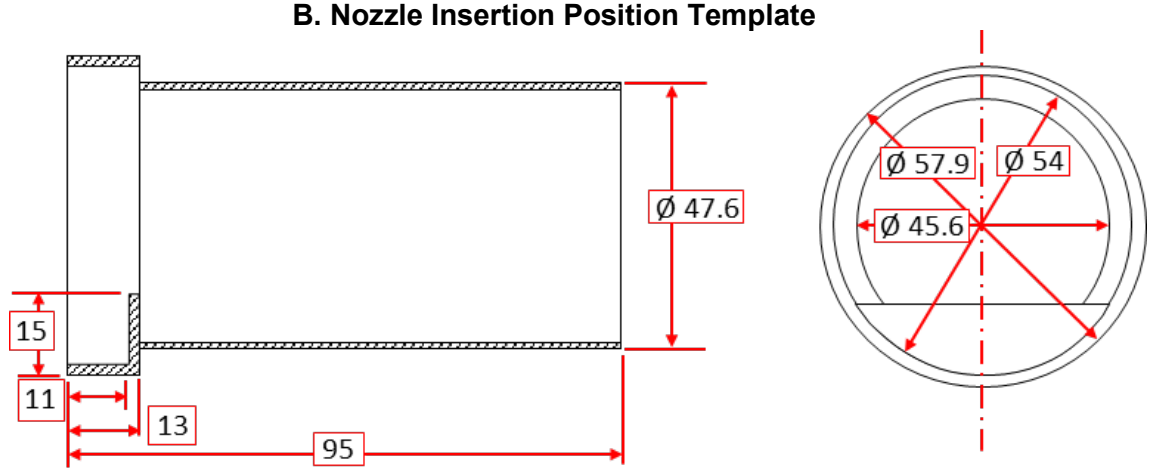

Dimensions are in millimeters.

~~Figure 3F~~

~~Zone Placement for Vehicle Usage for Comparison to Nozzles with Spout Angles Outside of the Range Specified in Table 3-2 (S_α of 19.5° to 26.0°)~~

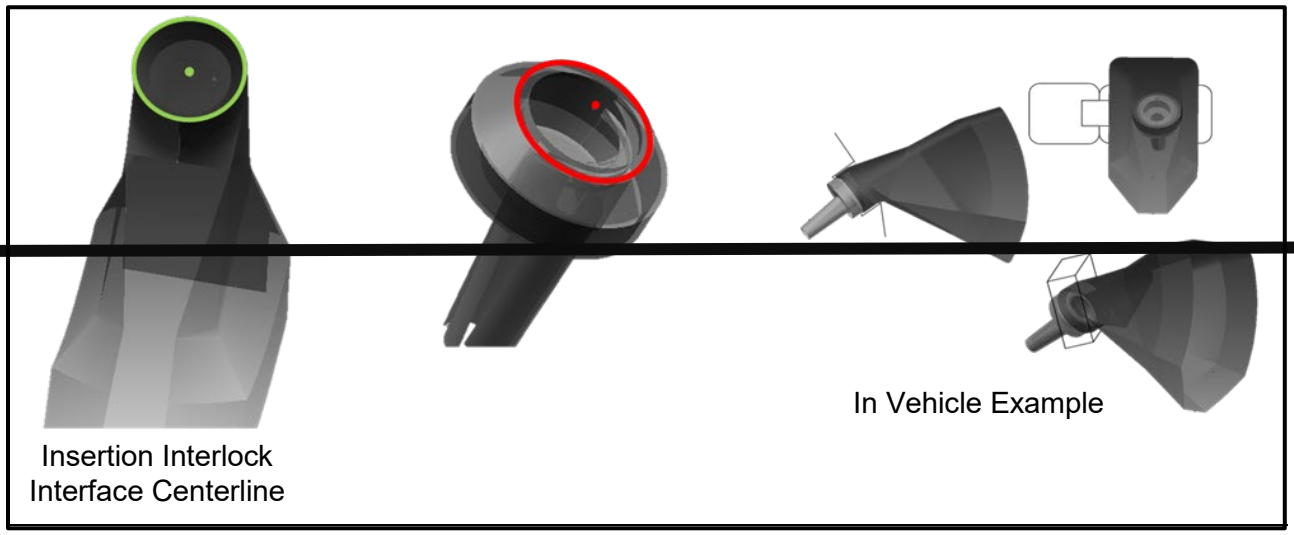

~~Figure 3G~~

~~Nozzle Vehicle Clearance for Comparison to Nozzles with Spout Angles Outside of the Range Specified in Table 3-2 (S_α of 19.5° to 26.0°)~~

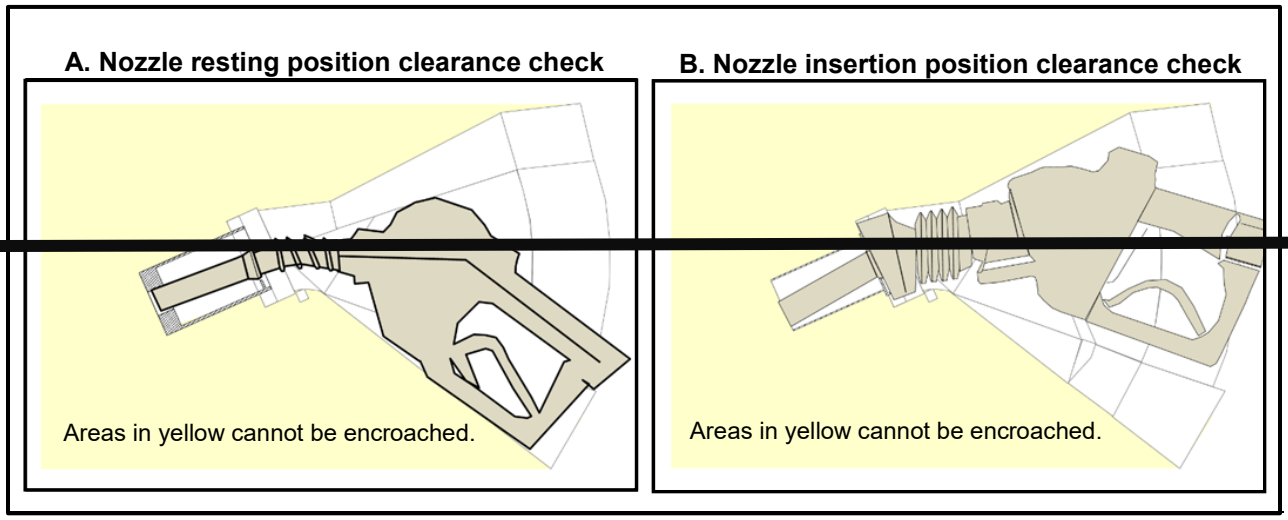

4. CERTIFICATION OF ECO NOZZLES AND LOW PERMEATION HOSES

The Executive Officer shall certify only those ECO Nozzles and low permeation hoses that, based on testing and engineering evaluation of that component's design, component qualities, and performance, are demonstrated to meet all applicable requirements of this certification procedure. Steps and conditions of the certification process, along with the Sections of this document that describe them, are outlined below.

(a)	Application Process	Section 5 (Nozzles) Section 14 (Hoses)
(b)	Evaluation of the Application	Section 6 (Nozzles & Hoses)
(c)	ECO Nozzle Testing	Section 7 (Nozzles)
(d)	Alternate Test and Inspection Procedures	Section 8 (Nozzles & Hoses)
(e)	Documentation of Certification	Section 9 (Nozzles & Hoses)
(f)	Duration and Conditions of Certification	Section 10 (Nozzles & Hoses)
(g)	Certification Renewal	Section 11 (Nozzles & Hoses)
(h)	Amendments to Executive Orders	Section 12 (Nozzles & Hoses)

4.1 Each applicant submitting a component for certification shall be charged fees not to exceed the actual cost of evaluating and testing the component to determine whether it qualifies for certification. The applicant is required to demonstrate ability to pay the cost of testing prior to certification and performance testing. Applicants may request a payment plan for testing and certification costs. Requests for a payment plan should be submitted in writing to the Executive Officer and should include the payment frequency (monthly, quarterly, etc.) and amount of each payment to meet the obligation. Payment of fees shall be a condition of certification. Failure to fulfill the conditions of payment may result in revocation of the Executive Order.

5. APPLICATION PROCESS FOR ECO NOZZLES

All of the information specified in the following subsections shall be submitted to the Executive Officer for an application to be evaluated. An application for certification of an ECO Nozzle may be made to the Executive Officer by any applicant.

The applicant for certification shall identify, in the preliminary application, the standard(s) or specification(s) with which the ECO Nozzle complies, and demonstrate that the proposed component meets the primary performance standard(s) or specification(s) required by section 3 of this Procedure. For the preliminary application, the applicant shall have performed tests for all applicable performance specifications and standards. Engineering reports of successful test results for all these tests must be included in the preliminary application. In order to expedite the application process, the Executive Officer may determine that the application is acceptable based on the results of abbreviated testing for spillage, retention, spitting, and post-fueling drips. Test results from a minimum of four nozzles shall be submitted for an operational test of at least 30 days, and for at least

80 observations of spillage (including at least 40 percent fill-ups), 20 test runs for retention and spitting, and at least 20 test runs for post-fueling drips.

The ECO Nozzle, as characterized by these reports, shall be subjected to an engineering evaluation. If the preliminary application is deemed acceptable, the applicant shall be notified and shall expeditiously install the ECO Nozzle for certification testing. If the preliminary application is deemed unacceptable, applicants will be notified of any deficiencies within 60 days. The final application shall not be deemed complete until it contains the results of all necessary testing, the approvals of other agencies, the finalized operating and maintenance manuals, and all other requirements of certification.

The applicant shall provide a statement that all production parts will be built with the same manufacturing standards and achieve the same performance as the parts that will be evaluated during the certification. This statement shall include that all performance standards, manufacturing practices and product testing conducted by the applicant will guarantee that all parts will meet applicable standards and specifications.

The application shall be written and signed by an authorized representative of the applicant, and shall include all of the items listed below.

(a) Description of ECO Nozzle and Associated Fueling Components (§5.1)
(b) Materials Compatibility with Fuels (§5.2)
(c) Evidence of Compatibility (§5.2)
(d) Evidence of Reliability (§5.3)
(e) Installation and Maintenance Requirements (§5.4)
(f) Evidence of Financial Responsibility of the Applicant (§5.5)
(g) A Copy of the Warranty (§5.6)
(h) Request for and Information about Proposed Test Station (§5.7)
(k) Challenge Modes and Test Protocols (§5.8)
(l) Other Information (§5.9)

In addition, an electronic version (DVD/CD/Thumb Drive, etc.) of the application shall also be submitted to CARB that contains all aspects of the written and signed version in Portable Display Format (PDF) or other format acceptable to the Executive Officer.

Table 5-1
Estimated Timeline for the Certification Application Process

Action	Time	Determination	CARB Response
Preliminary Application Filed	60 days	Acceptable	Preliminary Application Accepted Test Site Approval Granted
Preliminary Application Filed	60 days	Unacceptable	Notification of Deficiencies
Application Resubmitted	30 days	Acceptable	Preliminary Re-Application Accepted Test site Approval Granted
Application Resubmitted	30 days	Unacceptable	Initial Re-Application Returned with Notation of Deficiencies
Final Application Complete	120 days	Acceptable	Executive Officer Issues Certification Executive Order
Final Application Complete	120 days	Unacceptable	Executive Officer Denies Certification

5.1 Description of ECO Nozzle and Associated Fueling Components

The application shall include a complete description of the ECO Nozzle concept, design and operation, including, but not limited to, the following items.

5.1.1 Identification of critical ECO Nozzle operating parameters. An engineering evaluation will be performed by the Executive Officer to evaluate any proposed specifications and to establish additional performance specifications if required.

5.1.2 Complete engineering drawings of the ECO Nozzle and hose. These drawings shall include the full production nozzle and hose, as well as each individual sub-assemblies and parts used in the construction of the component. All drawings shall show part number(s), drawing revision level, revision level detail, parts list (if applicable), material(s), dimensions and tolerances.

5.1.3 ECO nozzle engineering parameters.

5.1.4 Results of tests demonstrating that the ECO Nozzle met all applicable performance standards. These tests shall be conducted by, or at the expense of, the applicant.

5.1.5 Estimated retail price of ECO Nozzle.

5.2 Compatibility

5.2.1 The applicant shall submit evidence of compatibility, including the following:

5.2.2 Evidence that ECO Nozzles can fuel any vehicle complying with fillpipe specifications ("Specifications for Fill Pipes and Openings of Motor Vehicle Fuel Tanks" incorporated by reference in Cal. Code Regs, title 13, §2235.

5.2.3 The applicant shall provide information regarding the materials specifications, including evidence of compatibility with all fuels in common use in California, including seasonal changes, and approved for use as specified in title 13, CCR, section 2260 et seq.. Applicants for certification may request limited certification for use with only specified fuel blends. Such fuel-specific certifications shall clearly specify the limits and restrictions of the certification.

5.3 Reliability of the System

In order to ensure ongoing compliance, adequately protect public health, and protect the end-user, the reliability of the ECO Nozzle shall be addressed in the application, including the following:

5.3.1 The expected life of ECO Nozzles.

5.3.2 Description of tests conducted to ascertain compliance with performance standards and specifications for the expected life of ECO Nozzles, any procedures or mechanisms designed to correct problems, and test results.

5.3.3 Identification and emission impact of possible failures of ECO Nozzles.

5.3.4 Procedure and criteria for factory testing of ECO Nozzles.

5.3.5 Detailed description of the Quality Assurance/Quality Control (QA/QC) protocols used by the manufacturer to ensure the production version of the ECO Nozzle meets and maintains certification standards.

5.4 Installation, Operation, and Maintenance of the System

The installation, operation, and maintenance plan shall be submitted, and shall include at least the following items:

5.4.1 Installation, operation, and maintenance manuals of the ECO Nozzle.

5.4.2 A plan for training installers in the proper installation of the ECO Nozzle, if required by applicant.

5.4.3 A replacement parts program, if provided by applicant.

5.4.4 The estimated installation costs and yearly maintenance costs.

5.5 Evidence of Financial Responsibility

The applicant shall submit evidence of financial responsibility to ensure adequate protection to the end-user of the product as specified in Section 10 and to demonstrate the ability to pay for certification tests.

5.6 Warranty

The applicant shall submit a copy of the warranty for the ECO Nozzle, and samples of component tags or equivalent method of meeting warranty requirements as specified in Section 10.

5.7 Test Station

5.7.1 The ECO Nozzles shall be installed and tested in an operating gasoline dispensing facility for the purpose of certification testing.

5.7.2 The applicant shall make arrangements for the ECO Nozzles to be installed in an operating gasoline dispensing facility meeting the requirements of Section 7.

5.7.3 The request for designation as a test site shall include the following information:

(a) Location of the facility;
(b) Throughput data for at least six months. The throughput data submitted in the certification application shall be the most current data available; and
(c) Hours of operation.

5.8 Challenge Modes and Test Protocols

The application shall identify potential challenge modes, as described in Section 7. Test protocols shall be developed by the applicant and submitted with the certification application, along with test results, observations, or other analyses conducted by the applicant, to determine if the system meets the applicable standards and specifications when tested in challenge mode. These protocols are subject to engineering evaluation and approval by the Executive Officer.

5.9 Other Information

The applicant shall provide any other information that the Executive Officer reasonably deems necessary.

6. EVALUATION OF THE APPLICATION

The application for certification of ECO Nozzles or low permeation hoses shall be subjected to an evaluation by the Executive Officer. The evaluation of the application shall include, but is not limited to, subsections 6.1 through 6.6.

6.1 Performance Standards and Specifications

The performance standards and specifications identified by the applicant shall be reviewed to ensure that they include and conform to the applicable standards and specifications in Section 3 of this Procedure.

6.2 Bench and Operational Testing Results

The procedures for, and results of, bench testing and operational testing contained in the application shall be reviewed. The review shall determine if the procedures adhere to required methodology and ensure that the results meet or exceed the standards and specifications in Section 3 of this Procedure. The evaluation shall include a determination of necessary verification testing.

6.3 Evaluation of ECO Nozzle Design

The ECO Nozzle shall be evaluated to ensure that it is consistent with the generally accepted principles of physics, chemistry, and engineering~~.~~, including an assessment of how the nozzle design may adversely affect its ability to meet applicable standards and specifications of Section 3 of this procedure under in-use conditions.

6.4 Materials Specifications and Compatibility with Fuel Formulations

The ECO Nozzle materials specifications shall be reviewed to ensure chemical compatibility with gasoline and/or any oxygenates that may be present in gasoline on an ongoing or on a seasonal basis, as specified in Section 5.2.3. This review shall include consideration of the variations in gasoline formulations for octane differences and summer fuel and winter fuel.

6.5 Installation, Operation and Maintenance Manuals

The installation, operation and maintenance manuals for the ECO Nozzle shall be reviewed for completeness (see Section 10.5). Routine maintenance procedures shall be reviewed to ensure adequacy and determine that the procedures are not unreasonable (see Section 10.5).

6.6 Challenge Mode Determination

The applicant may propose, and the Executive Officer shall determine, whether additional testing is needed to ensure the component will meet the applicable standards and specifications under various typical operating parameters. Proposed test protocols may be developed by the applicant to determine if the component or system meets the applicable standards and specifications under such conditions. These test protocols, after engineering evaluation and upon approval of the Executive Officer, are applied during certification testing as provided in section 7.4.2. The CARB Executive Officer may, for good cause, require modification of, and/or testing in addition to, challenge mode testing proposed by the applicant.

7. CERTIFICATION TESTING OF ECO NOZZLES

The Executive Officer shall conduct, or shall contract for and observe, testing of no less than four (4) ECO Nozzles for the purpose of certification. Except as otherwise specified in Section 8 of this procedure, ECO Nozzles shall be subjected to evaluation and testing pursuant to the applicable performance standards, performance specifications, and test procedures specified in Section 3 of this procedure.

Certification testing of ECO Nozzles shall be conducted only after the preliminary application for certification has been found to be acceptable. Some tests may be conducted more than once to characterize the performance over time.

Any failure during testing shall be cause for termination of the certification test, except as noted below. Any failures must be investigated by the applicant and an explanation provided to the Executive Officer within one week of the test failure discovery. The Executive Officer may extend this one week time period for good cause. The Executive Officer may consider information and circumstances presented by the applicant, including previous certification testing, to demonstrate that the failure was attributable to something other than the design of the ECO Nozzle, and may allow further testing without modification.

Any applicant or representative of an applicant found to have performed unauthorized maintenance, or to have attempted to conceal or falsify information, including test results and/or equipment failures, may be subject to civil and criminal penalties and testing shall be terminated.

7.1 Test Site for Field Testing of ECO Nozzles

The applicant shall make arrangements for the ECO Nozzles and associated fueling components to be installed in one or more operating ORVR Fleet Facilities for certification testing, and the applicant shall request, in writing, approval of the ORVR Fleet Facilities as a test site from the Executive Officer. Upon determining that the ORVR Fleet Facilities meets all of the following criteria, the Executive Officer shall, in writing, designate the selected location as a test site, and exempt it from any state or local district prohibition against the installation of uncertified equipment. This shall not exempt it from the prohibition against the offer for sale, or sale, of uncertified equipment. The ECO Nozzles and associated fueling components shall be installed throughout the entire facility (note this requirement applies to the primary certification test site). The Executive Officer may require that the ECO Nozzle be installed in more than one facility for the purpose of testing.

7.1.1 The station shall be located within 100 miles of the CARB Sacramento offices. When a suitable location for testing cannot be located within 100 miles of the CARB offices, the Executive Officer may, for good cause, grant approval of a test station elsewhere, provided that all the necessary testing can be conducted at that location. The applicant shall be responsible for any additional costs, such as travel, associated with that location.

7.1.2 Continuous access to the test site by CARB staff, without prior notification, shall be provided. Every effort will be made to minimize inconvenience to the owner/operator of the facility. If testing deemed necessary cannot reasonably be conducted, the facility shall be deemed unacceptable and the test shall be terminated.

7.1.3 If test status is terminated for any reason, uncertified equipment shall be removed within sixty (60) days, unless the Executive Officer extends the time in writing. The local district with jurisdiction over the facility may impose a shorter time.

7.1.4 All test data collected by the applicant at the test site during certification testing shall be made available to the Executive Officer within fifteen (15) working days. Continuous data shall be submitted in bimonthly increments within 15 days of the last day of the increment. Failure to provide this information may result in extension or termination of the test. The Executive Officer may specify the format in which the data is to be submitted.

7.1.5 Test site designation may be requested by the applicant, or by another person, for facilities other than the certification test site(s), for the purpose of research and development, or independent evaluation of an ECO Nozzle -prior to its certification. Approval of such a test site shall be at the discretion of the Executive Officer. The research and development test site shall be subject to all of the above conditions with the exception of 7.1.1.

7.2 Bench Testing of Components

Components identified by the engineering evaluation as requiring bench testing to verify performance standards and specifications shall be submitted to the Executive Officer prior to commencement of operational testing. This testing may be repeated during and/or after the operational testing.

7.3 Operational Test of at Least 180 Days

7.3.1 All ECO Nozzles shall be subjected to an operational test. The duration of the test shall be for a minimum of 180 days, except as otherwise provided in Sections 11 and 12.

7.3.2 No maintenance shall be performed other than that which is specified in the installation, operation and maintenance manual. Such maintenance as is routine and necessary shall be performed only after notification of the Executive Officer. Occurrences beyond the reasonable control of the applicant, such as vandalism or accidental damage by customers (e.g., drive-offs), shall not be considered cause for failure of the ECO Nozzle evaluation.

7.3.3 Except where it would cause a safety problem, maintenance shall not be performed until approval by the Executive Officer has been obtained. In those situations that require immediate action to avoid potential safety problems,

maintenance may be performed immediately and the Executive Officer shall be notified as soon as practicable thereafter and provided with a narrative of the reasons giving rise to the maintenance and the nature of the maintenance performed.

7.3.4 Tests of the ECO Nozzle performance shall be conducted periodically throughout the operational test period. If the results of such tests, when extrapolated through the end of the warranty period, show a change that results in the degradation of a performance standard or specification, the Executive Officer may extend or terminate the operational test.

7.4 Equipment Defect and Challenge Mode Testing

7.4.1 Equipment Defect Testing

Testing to determine vapor recovery equipment defects may be conducted if deemed necessary by the Executive Officer. Vapor recovery equipment defect testing may be allowed during the operational test only when the Executive Officer has determined that conducting the testing does not affect the normal operation of the ECO Nozzle.

7.4.2 Challenge Mode Testing

Testing to verify that the system meets applicable standards under various GDF operating conditions may be conducted, if deemed necessary by the Executive Officer. Challenge mode tests may be allowed during the operational test only when the Executive Officer has determined that conducting the testing does not affect the normal operation of the ECO Nozzle.

8. ALTERNATE TEST PROCEDURES AND INSPECTION PROCEDURES

Test procedures other than those specified in this certification procedure shall be used only if prior written approval is obtained from the Executive Officer. A test procedure is a methodology used to determine, with a high degree of accuracy, precision, and reproducibility, the value of a specified parameter. Once the test procedure is conducted, the results are compared to the applicable performance standard to determine the compliance status of the facility. Test procedures are subject to the provisions of Section 41954(h) of the H&SC.

8.1 Alternate Test Procedures for Certification Testing

The Executive Officer shall approve, as required, those procedures necessary to verify the proper performance of the component(s).

8.2 Request for Approval of Alternate Test Procedure

Any person may request approval of an alternative test procedure. The request shall include the proposed test procedure, including equipment specifications and, if appropriate, all necessary equipment for conducting the test. If training is required to properly conduct the test, the proposed training program shall be included.

8.3 Response to Request

The Executive Officer shall respond within fifteen (15) days of receipt of a request for approval and indicating that a formal response will be sent within sixty (60) days. If the Executive Officer determines that an adequate evaluation cannot be completed within the allotted time, the Executive Officer shall explain the reason for the delay, and will include the increments of progress such as test protocol review and comment, testing, data review, and final determination. If the request is determined to be incomplete or unacceptable, the Executive Officer shall respond with identification of any deficiencies. The Executive Officer shall issue a determination regarding the alternate procedure within sixty (60) days of receipt of an acceptable request.

8.4 Testing of Alternate Test Procedures

All testing to determine the acceptability of the procedure shall be conducted by CARB staff or by a third party responsible to and under the direction of CARB. Testing shall be conducted in accordance with the written procedures and instructions provided. The testing shall, at a minimum, consist of nine sets of data pairs, pursuant to USEPA Reference Method 301, “Field Validation of Pollutant Measurement Methods from Various Waste Media”, 40 CFR Part 63, Appendix A, 57 Federal Register page 61992 (May 18, 2011). Criteria established in USEPA Reference Method 301 shall be used to determine whether equivalency between the two test methods exists. For situations where Method 301 is not directly applicable, the Executive Officer shall establish equivalence based on the concepts of comparison with the established method and statistical analysis of bias and variance. Method Approval of the procedure shall be granted, on a case-by-case basis, only after all necessary testing has been conducted. Because of the evolving nature of technology and procedures for vapor recovery systems, such approval may or may not be granted in subsequent cases without a new request for approval and additional testing to determine equivalency. If, after approval is granted, subsequent information demonstrates that equivalency between the two methods no longer meets the USEPA Method 301 requirements, the Executive Officer shall revoke the alternate status of the procedure.

8.5 Documentation of Alternate Test Procedures

Any such approvals for alternate test procedures and the evaluation testing results shall be maintained in the Executive Officer's files and shall be made available upon request. Any time an alternate procedure and the reference procedure are both conducted and yield different results, the results determined by the reference procedure shall be considered the true and correct results.

8.6 Inspection Procedures

Inspection procedures are methodologies that are developed to determine compliance based on applicable performance standards or specifications. Inspection procedures are typically, but not necessarily, parametric in nature and possess a built-in factor of safety, usually at least twice the applicable standard or specification. Inspection procedures are not subject to Section 41954(h) of the H&SC.

Upon submittal of an inspection procedure to CARB, the Executive Officer shall respond within thirty (30) days, providing the applicant with a determination of the applicability of Section 41960.2(d) or Section 41960.2(e) of the H&SC.

9. DOCUMENTATION OF CERTIFICATION

Documentation of certification shall be in the form of an Executive Order listing the criteria requirements of installation and operation of a certified ECO Nozzle and low permeation hose. The Executive Officer shall issue an Executive Order of Certification only to those applicants or manufacturers who have demonstrated full compliance with these certification procedures and the ability to maintain such compliance as provided herein.

9.1 Executive Order

The certification Executive Order shall include the following items.

9.1.1 A list of components certified.
9.1.2 Applicable Performance Standards, Performance Specifications and Test Procedures.
9.1.3 Applicable Operating Parameters and Limitations.
9.1.4 Warranty period(s).
9.1.5 Factory testing requirements, if applicable.

9.2 Summary of Certification Process

A summary of the certification process for each certified ECO Nozzle and low permeation hose shall be prepared by the Executive Officer. It shall contain documentation of the successful completion of all applicable portions of the requirements contained in this Certification Procedure including but not limited to the following: All problems encountered throughout the certification process, any changes made to address the identified problems, the location of the test station(s), the types of testing performed, the frequency and/or duration of any testing or monitoring, as appropriate, and any other pertinent information about the evaluation process shall be contained in this summary.

10. DURATION AND CONDITIONS OF CERTIFICATION

ECO Nozzle and/or low permeation hose certifications shall specify the duration and conditions of certification.

10.1 Duration of Certification

ECO Nozzles and low permeation hoses shall be certified for a period of four years. The certification Executive Order shall specify the date on which the certification shall expire if it is not renewed as specified in Section 11.

10.2 Certification Not Transferable

Upon successful completion of all certification procedure requirements, certification shall be issued to the company or individual requesting certification, as the Executive Officer deems appropriate. If the ownership, control or significant assets of the certification holder are changed as the result of a merger, acquisition or any other type of transfer, the expiration date of the certification shall remain unchanged. However, no person shall offer for sale, sell, or install any component covered by the certification unless the component is recertified under the new ownership, or, in the case of a component, is otherwise certified. Components installed prior to the transfer shall be subject to the specifications contained in Section 13 of this procedure.

10.3 Financial Responsibility

The adequacy of the (1) methods of distribution, (2) replacement parts program, (3) financial responsibility of the applicant and/or manufacturer, (4) trained network of service technicians available at a reasonable cost to the consumer, and (5) other factors affecting the economic interests of the component purchaser shall be evaluated by the Executive Officer and determined to be satisfactory to protect the purchaser and respond to warranty claims. A determination of financial responsibility by the Executive Officer shall not be deemed to be a guarantee or endorsement of the manufacturer or applicant.

If no component has yet been certified that meets additional or amended performance standards and specifications, as provided in Section 2.3, the applicant is also requested to provide evidence of the commitment of financial investors for the commercial manufacture of the component, a projected market demand of the component as of the operative date of the standard, a manufacturing plan with scheduled milestones for implementation of the plan, an inventory of equipment ready for shipment and a list of suppliers and subcontractors which are part of the manufacturing plan.

10.4 Warranty

The requirements of this section shall apply with equal stringency both to the original applicant and to re-builders applying for certification.

10.4.1 The applicant and manufacturer, if different than the applicant, of the ECO Nozzle and low permeation hose shall provide a warranty to the initial purchaser and any subsequent purchaser within the warranty period. This warranty shall include the ongoing compliance with all applicable performance standards and specifications. The applicant and/or manufacturer may specify that the warranty is contingent upon the use of trained installers.

10.4.2 The minimum warranty shall be for one year from the date of installation for all ECO Nozzles and low permeation hoses. The applicant may request certification for a warranty period exceeding the minimum one-year requirement.

10.4.3 The manufacturer of any ECO Nozzle and low permeation hose shall include a warranty tag with the certified equipment. The warranty tag shall be left with the service station (GDF) owner/operator. The tag shall contain at least the following information:

(a) Notice of warranty period;
(b) Date of manufacture, or where date is located on component;
(c) A statement that the component was factory tested and met all applicable performance standards and specifications; and
(d) A listing of the performance standards and/or specifications to which it was certified.

10.4.4 The Executive Officer shall certify only those ECO Nozzles and low permeation hoses that, on the basis of an engineering evaluation of such component's qualities, design, and test performance, can be expected to comply with such system's certification conditions over the one-year warranty period specified above.

10.5 Installation, Operation and Maintenance

ECO Nozzles and low permeation hoses requiring unreasonable maintenance or inspection/maintenance frequencies, as determined by the Executive Officer, shall not be certified. The manufacturer of any ECO Nozzles or low permeation hose shall be responsible for developing manual(s) for all installation, operation and maintenance procedures and shall be submitted with the application as provided by Section 5.4. This manual(s) shall be reviewed during the certification process and the certification shall not be issued until the Executive Officer has approved the manual(s).

10.5.1 The manual(s) shall include all requirements for the proper installation of the ECO Nozzle and low permeation hose. The manual(s) shall include recommended maintenance and inspection procedures and equipment performance procedures, including simple tests the operator can use to verify that the component is operating in compliance with all applicable requirements. The Executive Officer may require the inclusion of additional procedures.

10.5.2 No changes shall be made to CARB Approved Manuals without the Executive Officer's prior written approval.

10.6 Identification of System Components

10.6.1 All ECO Nozzles and ~~-~~low permeation hoses shall be permanently identified with the manufacturer's name, part number, and a unique serial number. This requirement shall apply to replacement subparts of the primary component unless exempted by the Executive Officer due to infeasibility. Specific components may be exempted from this requirement if the Executive Officer determines, in writing, that this is not feasible or appropriate.

10.6.2 ECO Nozzle serial numbers shall be permanently affixed to, or stamped on, the nozzle body and easily visible for inspection. The location of the serial number shall be evaluated by the Executive Officer prior to certification.

10.7 Compliance Enforcement

10.7.1 For new systems or components certified or approved after January 1, 2022, the applicant shall provide the Executive Officer with the following:

(a) A complete system or component that has successfully complied with applicable performance standards or performance specifications. In lieu of submitting a complete system or component, in order to reduce costs to applicants where feasible, the Executive Officer may request the submission of only sub-parts or sub-assemblies that are crucial in controlling emissions.

(b) Cut-away(s) of certain components such as hanging hardware (nozzle, breakaway, etc.) in addition to the item requested above, as requested by CARB. The intent is to help visualize and explain the intricacies and operation of critical sub-parts.

(c) A statement attesting that the submitted system or components are identical to those that are being tested or evaluated by the Executive Officer pursuant to Sections 6 and 7.

The Executive Officer shall store all submitted items in a location that has limited access, which includes maintaining the appropriate chain of custody.

The requirements of this section do not apply to renewal certifications for systems or components that have no changes to designs or materials.

10.7.2 The Executive Officer may, upon complaint or upon his or her own initiative, cause the review, inspection and/or testing of any component subject to certification under this certification procedure in any manner deemed necessary to determine ongoing compliance with certification procedure requirements and standards. Upon a determination of noncompliance based

on sufficient data and documentation, the certification holder shall bear the costs incurred during component review, inspection and/or testing.

10.8 Revocation of Certifications

The certification of ECO Nozzles and low permeation hoses determined not to be achieving the applicable performance standards and specifications listed in CP-207 may be revoked. The Executive Officer may conduct testing for the purpose of investigation of or verification of potential deficiencies.

Revoked ECO Nozzles or low permeation hoses may remain in use for the remainder of their useful life provided they comply with all of the requirements of section 13 or a period of four years, whichever comes first. ECO Nozzle or low permeation hose with revoked certifications shall not be installed on new installations or major modification of existing installations.

11. CERTIFICATION RENEWAL

At least eighteen months prior to the expiration of the certification period, the applicant may request to renew the certification. ECO Nozzle and low permeation hose certifications shall be renewed without additional testing if no data demonstrating system deficiencies is found or developed prior to the expiration date. During the four-year certification period, deficiencies shall be identified through periodic equipment audits, complaint investigations, certification or compliance tests, surveys, or other sources of information. If deficiencies are documented, they shall be resolved to the satisfaction of the CARB Executive Officer or the certification shall expire. The Executive Officer may extend certifications, for up to one year, if resolution of component deficiencies appears likely or if additional time is required to gather and evaluate information.

The renewal process, along with the sections of this document that describe them, are outlined below.

(a) Request for Renewal	Section 11.1
(b) Review of the Request	Section 11.2
(c) Evaluation of System Deficiencies	Section 11.3
(d) Letter of Intent	Section 11.4
(e) Renewal of Executive Order	Section 11.5
(f) Denial of Executive Order Renewal	Section 11.6

If no request for renewal is received by CARB within eighteen (18) months of the certification expiration date, the Executive Officer shall send a “Notice of Pending Expiration” to the holder of the Executive Order. Table 11-1 provides an estimated timeline for the renewal process. The timeline is intended to serve as a guide to provide approximate target schedules for completion of steps in the renewal process. Failure to send such notice does not serve to extend the certification expiration date.

Each applicant submitting a certification renewal request shall be charged fees not to exceed the actual cost of evaluating and/or testing the system to determine whether it qualifies for renewal. Refer to Section 4 for more information on Fee Payment.

11.1 Request for Renewal

The request for renewal shall be written and signed by an authorized representative, and shall include the items listed below:

11.1.1 The Executive Order Number to be renewed;

11.1.2 Identification of any component deficiencies through warranty claims or other information such as;

- (a) User feedback
- (b) Contractors/Testers
- (c) Distributors

11.1.3 Amendments to the Executive Order such as:

- (a) Warranty information
- (b) Installation, Operations, and Maintenance Manual
- (c) Component drawings
- (d) Component modifications

11.1.4 Updates to the training program;

11.1.5 Factory Testing Requirements;

11.1.6 Agency approvals or determinations, if any system modifications have been made since the original approval/determinations (to be submitted prior to approval of EO amendment, see Section 1.2), and

11.1.7 Other information such as the Executive Officer may reasonably require.

Table 11-1
Estimated Timeline for the Renewal Process

Action	By	Time before Expiration
Submittal of renewal request	Applicant	18 months
Notice of pending expiration (if no renewal request received)	CARB	18 months
Solicitation of component information	CARB	18 months (or at time of receipt of request)
Application review and initial response	CARB	
Renewal request documentation completed	CARB / Applicant	15 months
Submittal of component information for other agency approval/determinations	Applicant	12 months
If testing will be required		
Draft Testing protocol and site identification	CARB / Applicant	14 months
Seal site/start test	CARB	12 months
End testing	CARB	11 to 6 months
Administrative		
Letter of Intent and draft Executive Order	CARB	3 months
Final Executive Order	CARB	0 months

11.2 Review Request

The Executive Officer shall review the request and determine if any information provided warrants further evaluation/testing or if amendments to the Executive Order are needed. The applicant will be notified within 60 days of the receipt of the request and whether the submission of additional information is required.

11.3 Evaluation of System Deficiencies

In addition to the information provided in Section 11.1, the Executive Officer shall solicit information on component deficiencies through equipment audits, complaint investigations, certification or compliance tests, surveys, VRED data (if applicable), any deficiencies identified by District staff, or other sources of information. The Executive Officer may conduct testing to investigate and/or verify component deficiencies. Testing to evaluate component modifications, VRED lists (if applicable), to demonstrate compatibility, or for challenge mode determinations, will be subject to the applicable sections of CP-207. If potential deficiencies are noted, an evaluation will be conducted to determine if:

11.3.1 The deficiency has been or is in the process of being resolved;
11.3.2 Component modification(s) are necessary;
11.3.3 Executive Order modifications are necessary;
11.3.4 Additional testing is required.

11.4 Letter of Intent

After the review has been completed, a letter of intent will be issued to either 1) renew the Executive Order or 2) allow the Executive Order to expire. Conditions for Expired Certifications are discussed in Section 13 of this certification procedure. The letter of intent should be issued prior to the Executive Order expiration date but will not be issued prior to completion of the evaluation process described in Sections 11.1, 11.2 and 11.3. If the evaluation process is not complete and the letter of intent is not issued prior to the expiration date then the Executive Officer may determine that installation of the component(s) at new facilities or major modifications will not be allowed during the extension period.

The Executive Officer may allow a certification extension if:

11.4.1 resolution is likely but renewal time is insufficient; or
11.4.2 additional time is necessary to gather and evaluate information.

11.5 Renewal of Executive Order

Executive Orders approved for renewal shall be valid for a period of four years.

11.6 Denial of Executive Order Renewal

ECO Nozzle or low permeation hose certifications shall not be renewed if the Executive Officer determines that the performance standards and/or specifications in the Executive Order and CP-207 fail to be met. Non-renewed systems may remain in use for the remainder of their useful life or for up to four years after the expiration date, whichever is shorter, provided the requirements of Section 13 are met.

12. AMENDMENTS TO EXECUTIVE ORDERS

Amendments to Executive Orders may be requested to add alternate or replacement components. Alternate or replacement components may be modifications to components that were originally certified per CP-201, CP-206, and CP-207 or new components.

Sections of this document that describe the process to amend an EO are outlined below.

(a)	Request for Amendment	Section 12.1
(b)	Review of the Request	Section 12.2
(c)	Testing	Section 12.3
(d)	Letter of Intent	Section 12.4
(e)	Issuance of Executive Order	Section 12.5

12.1 Request for Amendment

The request for amendment shall be written and signed by an authorized representative of the applicant, and shall include the items listed below:

12.1.1 Executive Order to be amended;
12.1.2 Description of change;
12.1.3 Changes to the Executive Order such as:
- (a) Component drawings
- (b) Installation, Operations, and Maintenance Manual
- (c) Fuel and System Compatibility

12.1.4 Agency approvals or determinations (to be submitted prior to approval of EO amendment, see Section 1.2);
12.1.5 Updates to the training program;
12.1.6 Applicable information specified in Sections 5 and 10; and
12.1.7 Other information such as the Executive Officer may reasonably require.

12.2 Review of the Request

Requests for alternate or replacement components will be subjected to an engineering evaluation to determine the level of testing required. The Executive Officer may require full operational testing of at least 180 days, allow abbreviated and/or limited operational testing, or determine that a component modification does not affect the performance of the component and therefore no testing is required.

General criteria to be considered when determining the level of testing are as follows:

- (a) extent of physical changes to the component;
- (b) extent of material changes to the component;
- (c) changes that may affect the durability of the component;
- (d) whether performance standards or specifications are the same; and
- (e) information from previous certification testing.

12.2.1 Modified Components

Modified components (i.e., any changes made to ECO Nozzles and low permeation hoses) may be certified if testing demonstrates that performance standards and specifications will continue to be achieved. The level and duration of operational and/or other testing will be determined by the Executive Officer based on an engineering evaluation.

12.2.2 New Component(s) that have not been Previously Certified.

Components that have not previously been certified, whether for use as an alternate or replacement component, shall be required to undergo operational testing of at least 180 days. Limited operational testing may be considered for such components, if determined to be appropriate by the Executive Officer.

12.2.3 Modifications that do not affect the performance of the ECO Nozzle or Low Permeation Hose.

Certification shall not be required for component modifications, determined by the Executive Officer not to affect the performance of the ECO Nozzles. The Executive Officer shall notify the applicant in writing of the determination. However, in some cases, such as when a part number changes, an amendment to the Executive Order may be required. An engineering evaluation shall be conducted to document that the change will not affect the performance of the ECO Nozzles.

12.2.4 Other Amendments to Executive Orders

Alternative configurations of components may be considered for certification based on limited and abbreviated testing.

12.3 Testing

Component modifications shall be subjected to sufficient operational, challenge mode, and/or VRED testing to verify the performance and durability of the modified component relative to the certified component that was originally tested.

The level of operational testing to be required is determined as outlined in Section 12.2. Normally, full operational testing of at least 180 days is required. Abbreviated and/or limited operational tests may be allowed in some cases-, at the discretion of the Executive Officer. If operational tests are abbreviated, the minimum duration (and gasoline throughput requirement) will be specified by the Executive Officer. The test procedure and test frequency requirements for limited operational tests will be specified by the Executive Officer.

If operational testing is required, then the applicant will choose an appropriate test site meeting the requirements of Section 7.1. The applicant shall submit sufficient information to demonstrate that the requirements of Section 5.7 are met.

12.4 Letter of Intent

A letter shall be sent to the applicant stating the Executive Officer's intent to either issue the amended Executive Order or deny the request.

12.5 Issuance of Executive Order

The original expiration date shall be maintained for all Executive Order amendments unless a renewal, as described in Section 11, is specifically requested and approved. Previous versions of the Executive Order are superseded, as discussed in Section 13.

13. REPLACEMENT OF COMPONENTS WITH A TERMINATED, REVOKED, SUPERSEDED OR EXPIRED CERTIFICATION

–This section applies to components for which the certification was terminated, revoked, superseded, or has expired. Components that were installed prior to the date in which a component meeting the -amended performance standards and specifications is certified may remain in use for the remainder of their useful life provided they comply with all of the specifications of this section or four years, whichever comes first. Installed components that have superseded or expired Executive Orders, unless renewed in accordance with Section 11, may remain in use for the remainder of their useful life, provided they comply with all of the specifications of Section 13 or four years, whichever comes first.

13.1 Component Meeting Standards and Specifications

Components meeting the current and/or prospective operative performance standards or specifications may be approved for use as a replacement part with the no-longer-certified component for the remainder of the allowable in-use period.

When an approved, compatible component that meets the operative standards or specifications is determined to be commercially available, only that component shall be installed except as permitted by Section 13.2. Approval shall not require the replacement of already-installed components prior to the end of the useful life of that component. The approved replacement component shall be considered to be commercially available if that component can be shipped within three weeks of the receipt of an order by the manufacturer of the component.

13.2 Component Not Meeting Standards and Specifications

A component not meeting the currently operative performance standards or specifications, but which was certified for use with the system, may be used as a replacement only under either of the following circumstances:

(a) no compatible component that meets the new standards or specifications has been approved as a replacement part, or

(b) during a reasonable time period specified by the Executive Officer to allow for the sell-through of existing inventory of previously certified components.

13.3 Component Not Certified and Not Meeting Standards and Specifications

A component that was not certified and that does not meet all of the currently operative standards or specifications, may be approved as a replacement component provided that there are no other commercially available certified components meeting the most current performance standards or specifications.

13.4 Procedure for Approval of Replacement Components

13.4.1 A request shall be submitted to the Executive Officer.

13.4.2 The request shall include the information outlined in Section 12.1 and information demonstrating that the component is compatible.

13.4.3 Requests for replacement components will be subjected to an engineering evaluation to determine the level of testing required. The Executive Officer may require full operational testing of at least 180 days and other certification tests (e.g., VRED or challenge), allow abbreviated and/or limited operational testing, or determine that additional testing is not necessary.

General criteria to be considered when determining the level of testing are as follows:

(a) similarity of component designs;
(b) information from previous certification testing; and
(c) compatibility of the replacement component.

13.4.4 The Executive Officer shall issue an approval letter to authorize the use of the approved replacement component, to specify a sell through period, as applicable, and to detail any modification(s) to the Executive Order for which the component is approved. Requests not granted shall be documented with a disapproval letter.

14. REQUIREMENTS FOR, AND CERTIFICATION OF, LOW PERMEATION HOSES

All hoses which carry liquid fuel against the outermost hose wall shall permeate at a rate of no more than 10.0 grams per square meters per day ($g/m^2/day$) as determined by UL 330 (7th ed) - Underwriters Laboratories' Standard for Hose and Hose Assemblies for Dispensing Flammable Liquids.

The UL 330 (7th ed.) testing results shall comprise all of the certification testing for certification as a low permeation hose.

14.1 Request for Certification

If UL 330 (7th ed.) testing is not conducted by the Executive Officer, then the Executive Officer shall be made a beneficiary of the data within the contract of the applicant and the testing facility. All data and documentation relevant to determining the permeation rate of the hose, as described in section 15 of UL 330 (7th ed.), shall be transmitted to the Executive Officer by the testing facility, concurrently when transmitted to the applicant.

The request for certification shall be written and signed by an authorized representative of the applicant, and shall include the items listed below:

14.1.1 The applicant shall submit evidence that the hose is compatible with all hardware that it will be connected to when in use within the gasoline dispensing system.

14.1.2 The applicant shall provide information regarding the materials specifications of all components, including evidence of compatibility with all fuels in common use in California, including seasonal changes, ~~-~~and approved for use as specified in title 13, CCR, section 2260 et seq. If the applicant is requesting a certification for use only with specified fuel formulations, the applicant shall clearly identify, in the application, the included and excluded fuel formulations for which certification is requested.

14.1.3 The applicant shall state the expected useful life of the hose.

14.1.4 All applications shall include detailed engineering drawings of the hose and hose fittings. These drawings must provide all hose and fitting dimensions, including thicknesses of each individual hose material layer. Further, all hose, fitting and gasket materials must be identified.

14.1.5 Hose installation instructions shall be included with the application.

14.1.6 The applicant shall submit evidence of financial responsibility to ensure adequate protection to the end-user of the product as specified in Section 10.3 and to demonstrate the ability to pay for certification tests and cost.

14.1.7 The applicant shall comply with the warranty requirements of Section 10.4 and shall submit a copy of the warranty for the hose and samples of component tags.

14.1.8 All applications shall include the estimated retail price of the hose.

14.2 Hose Lengths

Once a hose of a particular construction has been determined to comply with the low permeation hose standard per section 14, the Executive Officer shall specify the length of the hose as a condition of certification after considering other applicable performance standards or specifications.

14.3 Identification of Certified Hose

Certified low permeation hoses shall comply with the marking and identification requirements of section 10.6.